record

Installation Quick Start Guide

Swing Door Operator

HA8

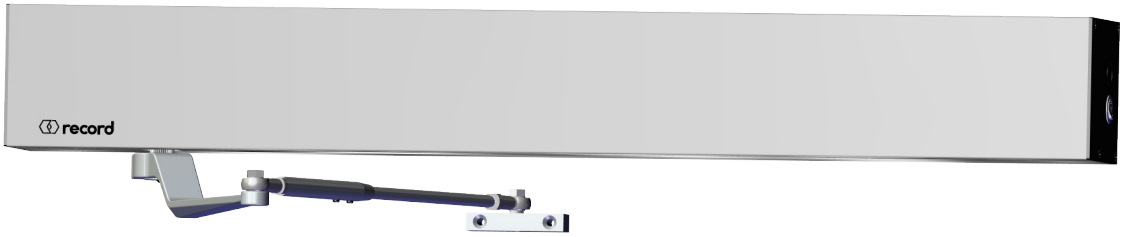

Scan the codes below for more information about the HA8 systems. Access the complete HA8 Installation Manual from the “Downloads” section on each product page.

Record USA HA8 Product Page

Record Canada HA8 Product Page

Technical Support: (833) 921-1337

Document identification

Article Number:	DOC-1672443
Version:	2.0
Publication date:	2026-10-20

Content subject to change without notice.

Record as word and logo are trademarks owned by the ASSA ABLOY Group.

Copyright © ASSA ABLOY.

The Bluetooth® word mark and logos are registered trademarks owned by Bluetooth SIG, Inc. and any use of such marks by ASSA ABLOY is under license.

Table of Contents

1. Replacement Parts 4
2. Replacement Fasteners 5
3. Purpose 6
4. Door Handings 6
5. Installation 8
6. Install the Push and Pull Arm 13
   6.1 Install the Push Arm 13
   6.2 Install the Pull Arm 16
7. Operator Tuning 18
   7.1 Setting Back Check and Latch Check 18
   7.2 Spring Tension Adjustment. 19

1. Replacement Parts

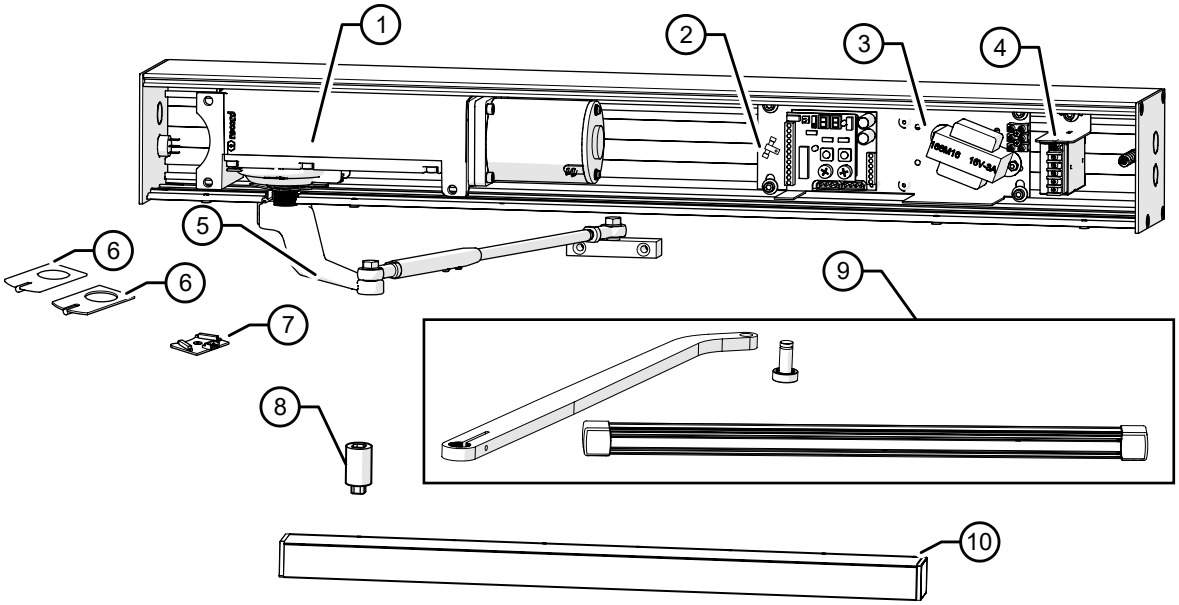

	Category	Part Number	Description
1	Operator	WL-PA05	Operator (Non-Handed)
2	Fuse	W5-421	Fuse 3AMP Analog Board
		W5-422	Fuse 3AMP Digital Board
3	Control Unit	W7-130-1	HA Digital Control Unit
4	Power Supply Kit (Optional)	WL-PWRKIT	RS-25-24 Power Supply Kit
5	Push Arm	W7-200	Complete Push Arm-Clear (with 17.5” rod)
		W7-205	Complete Push Arm-Black (with 17.5” rod)
		W5-500C	Extended Rod 22”- Clear
		W5-500B	Extended Rod 22”- Black
6	Limit Switch Magnet	WL-PA30	Operator Limit Switch with Magnet
7	Reed Switch	WL-P0068	Operator Reed Switch
8	HA8 & HA9 Spindle Extension	W8-865	HA8 & HA9 Spindle Extension (with $^{5}/_{16}$”-18x5-$^{1}/_{4}$” SCS)
9	Universal Arm Assembly	W7-260	HA8 & HA9 Universal Arm with 22” Pull Track Clear Kit
		W7-270	HA8 & HA9 Universal Arm with 22” Pull Track Bronze-Black Kit
10	Reveal Spacer	W8-863-S1	Spacer assembly - Silver
		W8-863-BLK	Spacer assembly - Black
	Reed Switch Cable	W5-415-1	Reed Switch Cable
	Hardware Kit	W5-641-1	Hardware Kit

2. Replacement Fasteners

Parts	Descriptions
5/16”-18 x ½” Serrated Flange SHCS, Silver Dacromet Coated	Mounting Screws for Gearbox and Control Unit
5/16”-18 x ¾” Serrated Flange SHCS, Silver Dacromet Coated	
5/16”-18 Standard Nut, Zinc Plated	Nut for mounting items onto Header
10-32 x 5/16” Undercut Phillips Flat Head Machine Screw, Zinc Plated	Header Cover Screw
¼”-20 x ¾” Undercut Type F Thread Cutting Phillips Screw, Black Zinc Plated	Header Endplate Screw
5/16”-18 x 4” SHCS, Black Zinc Plated	Bolt for Spindle
¼” x 1 ¼” Fender Washer, Zinc Plated	Washer for Spindle
#10-32 x 3/8” Button Head Hex Drive, Zinc Plated	Small screw for Spindle
5/16”-18 x 5 ¼” SHCS, Black Zinc Plated	Bolt for Spindle Extension
Push Arm Screws	Not Included
Universal Pull Arm Screws	Not Included

3. Purpose

The purpose of this guide is to provide a basic understanding of the workflow for installing the HA8 system. It is important to refer to and rely on the full Installation Manual for the comprehensive details necessary for a safe and proper installation.

4. Door Handings

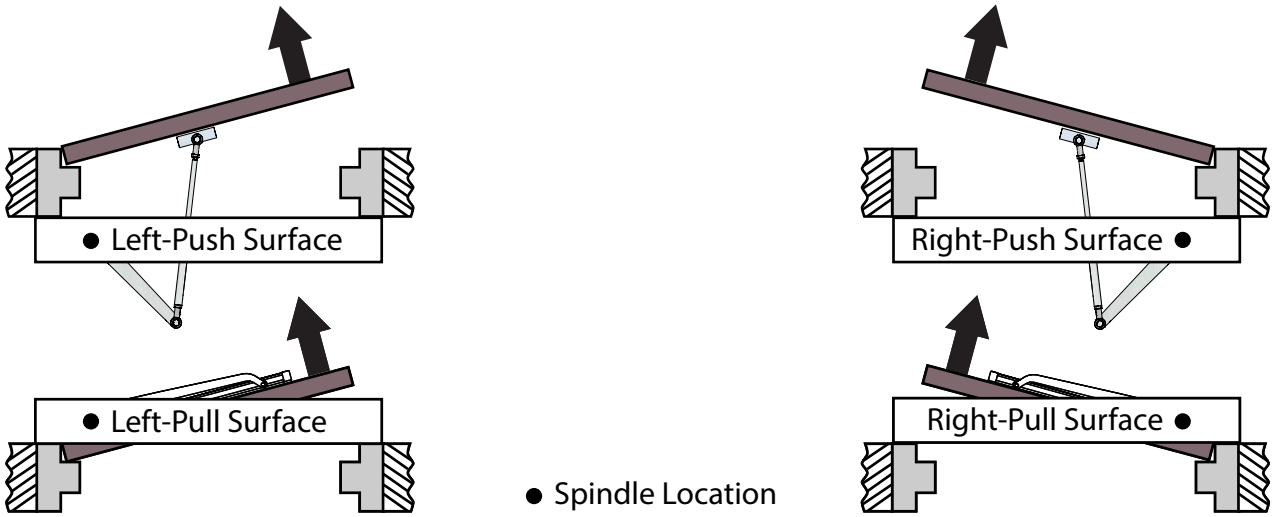

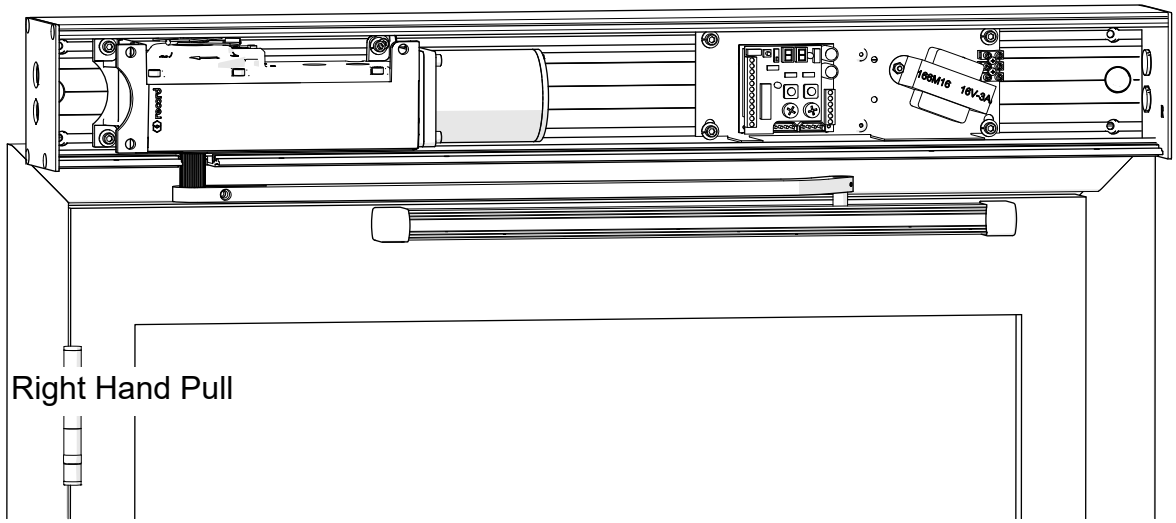

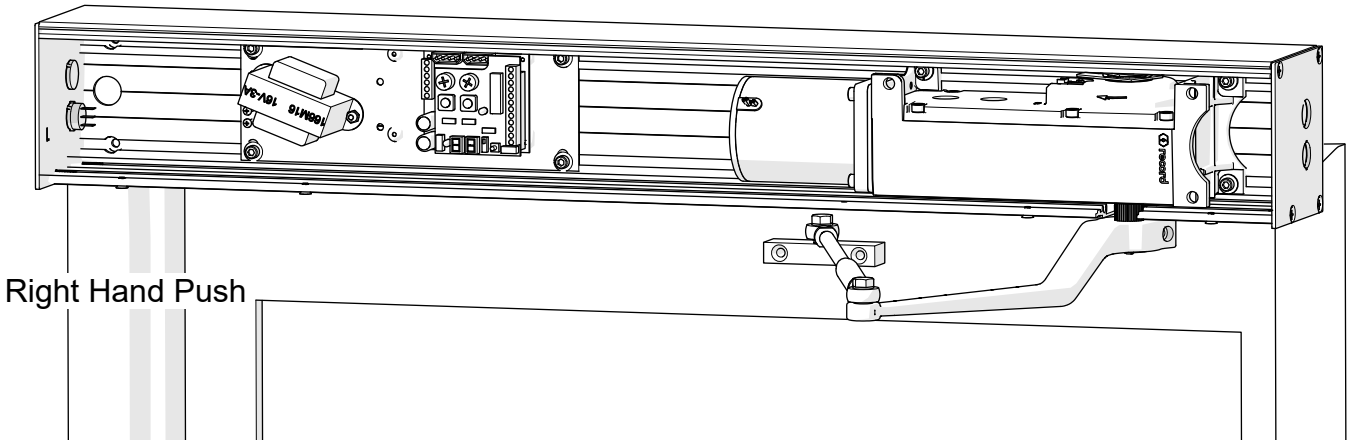

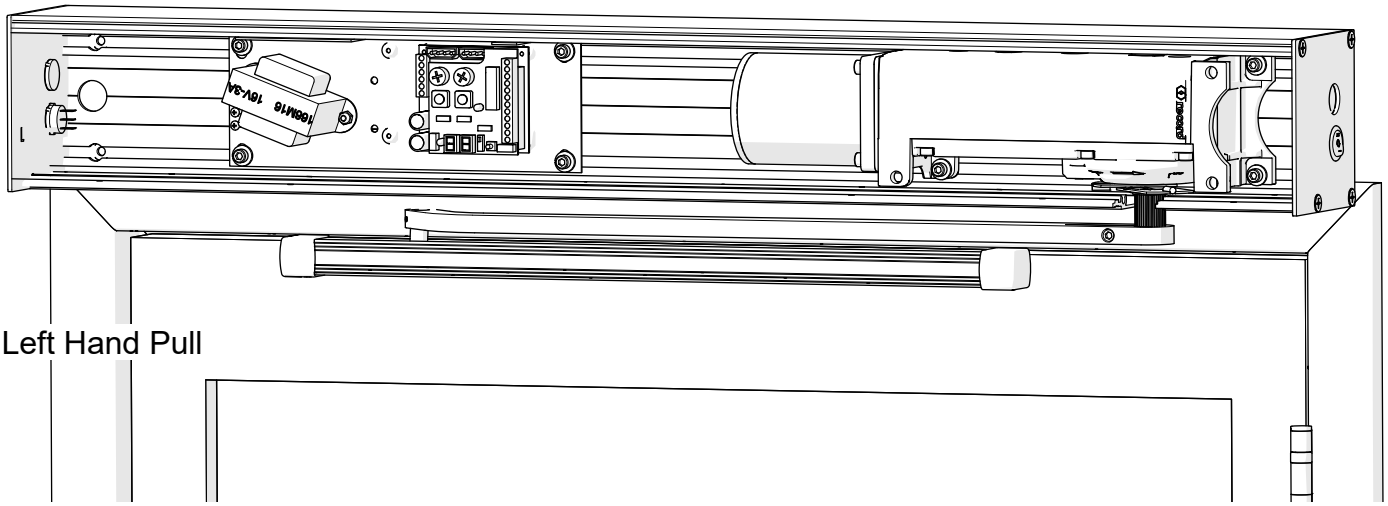
Left Hand Pull

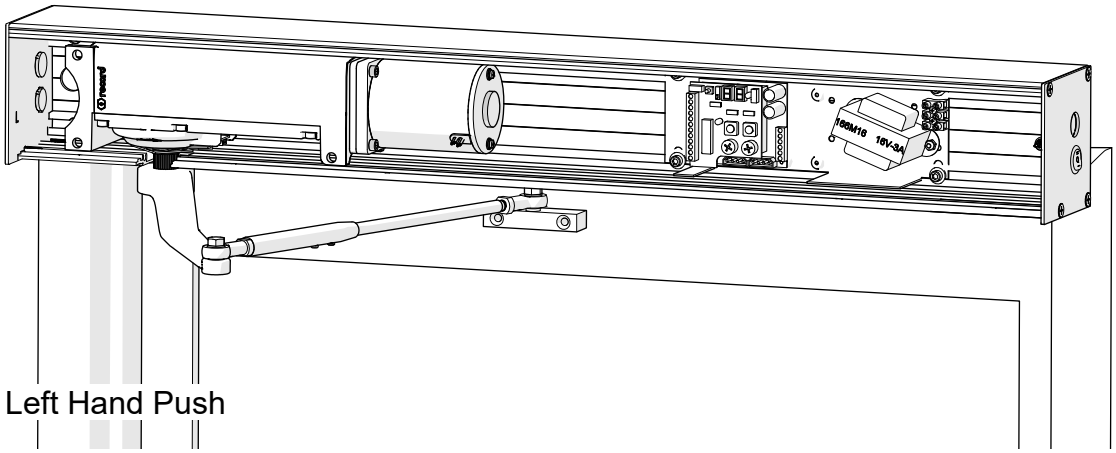
Left Hand Push

5. Installation

1. Remove the front cover.

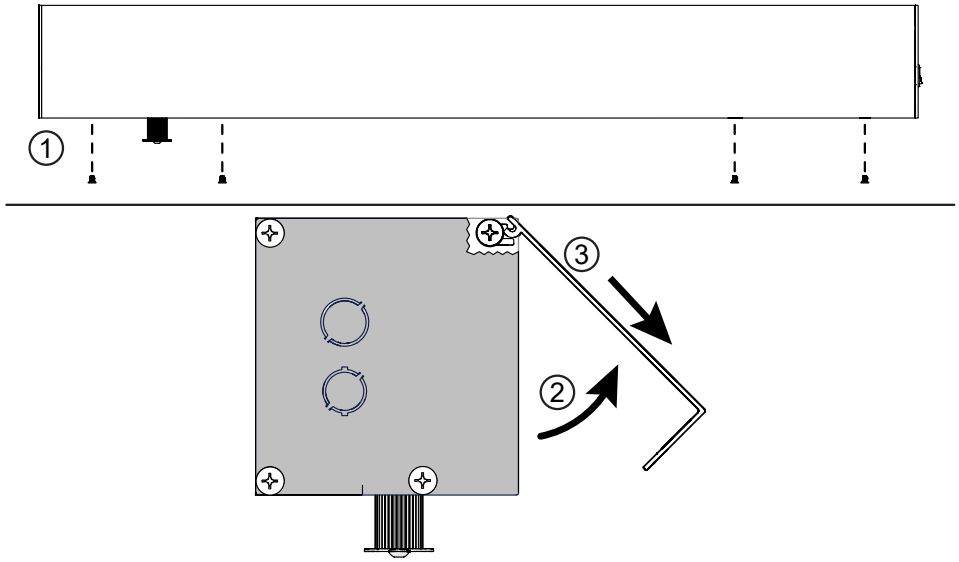

2. Remove the end caps.

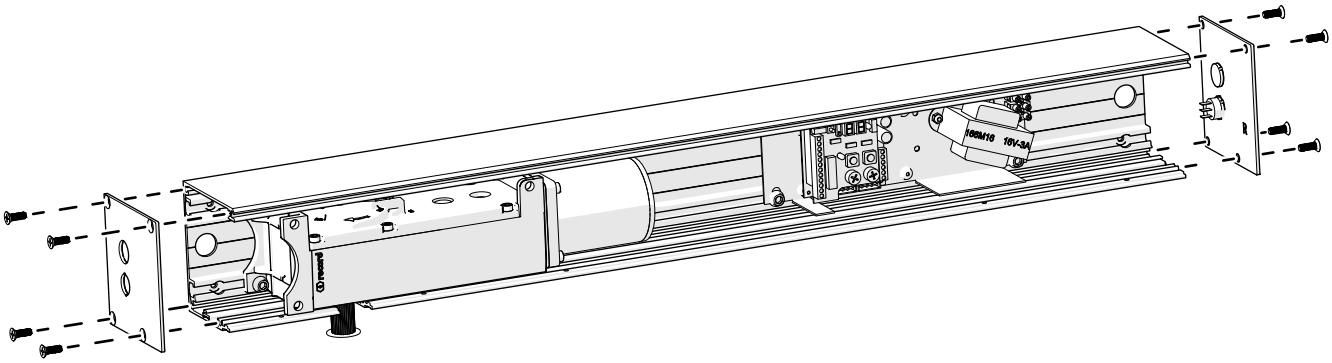

3. Remove the operator and control board.

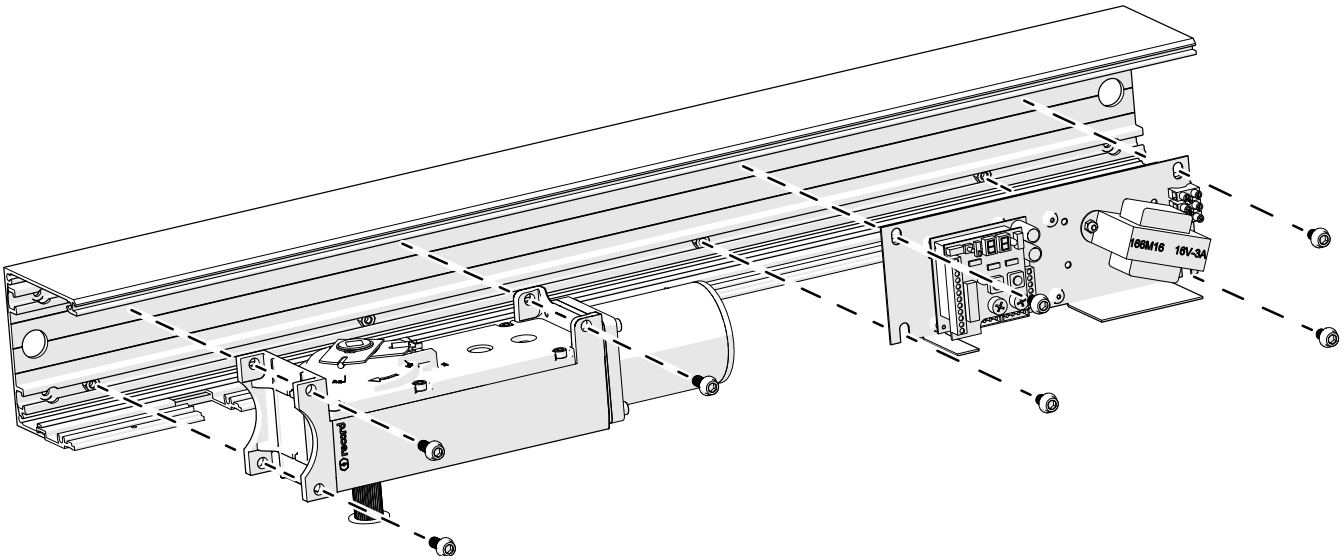

4. Position the header for mounting and pull the incoming power through the back of the header on the control board side.

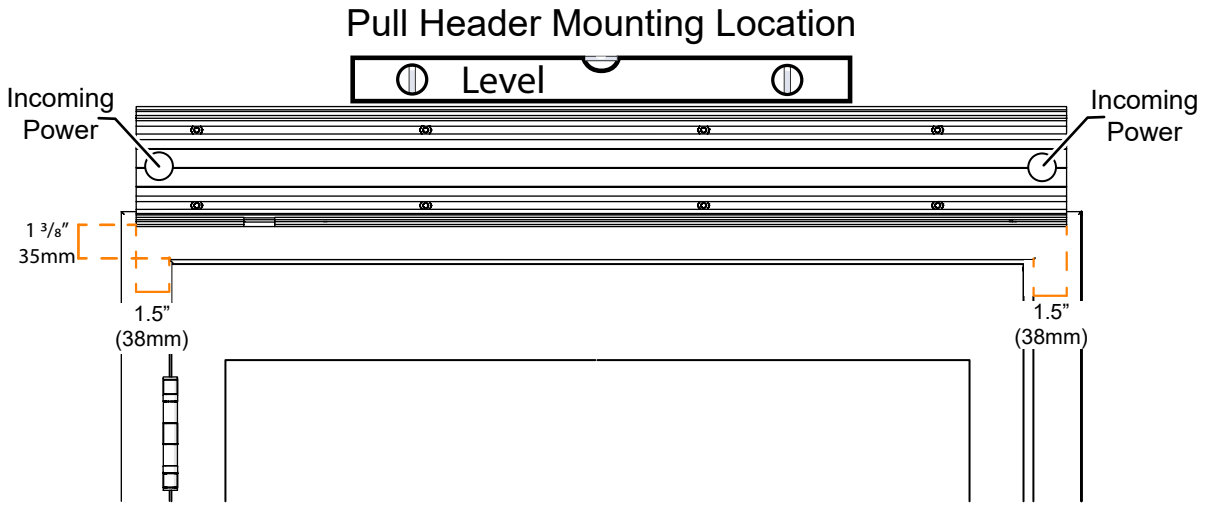

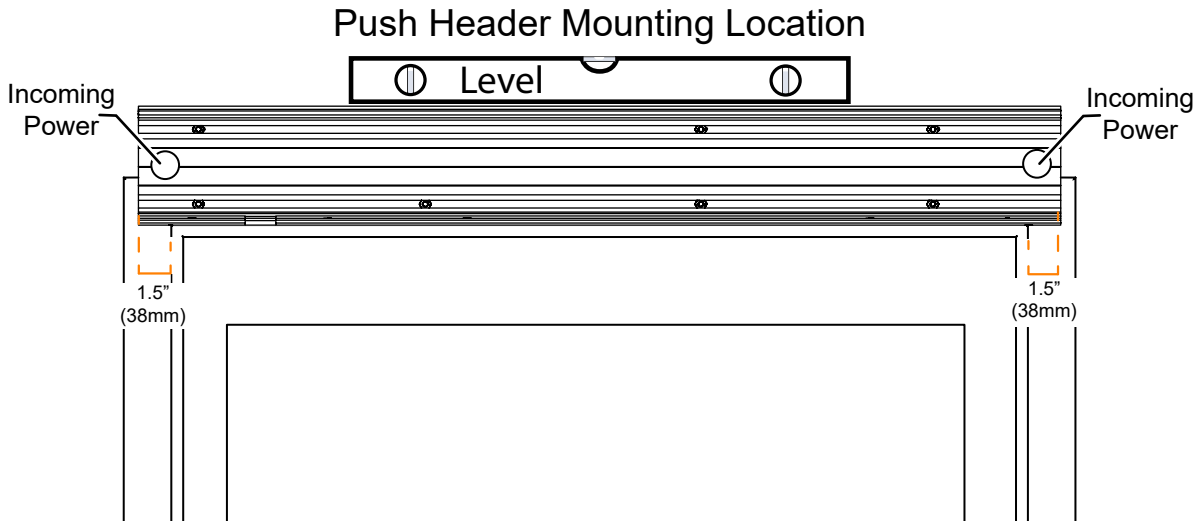

5. Mount the header. If possible, use the six (6) pre-drilled holes in the back of the header or use the optional mounting location area if necessary.

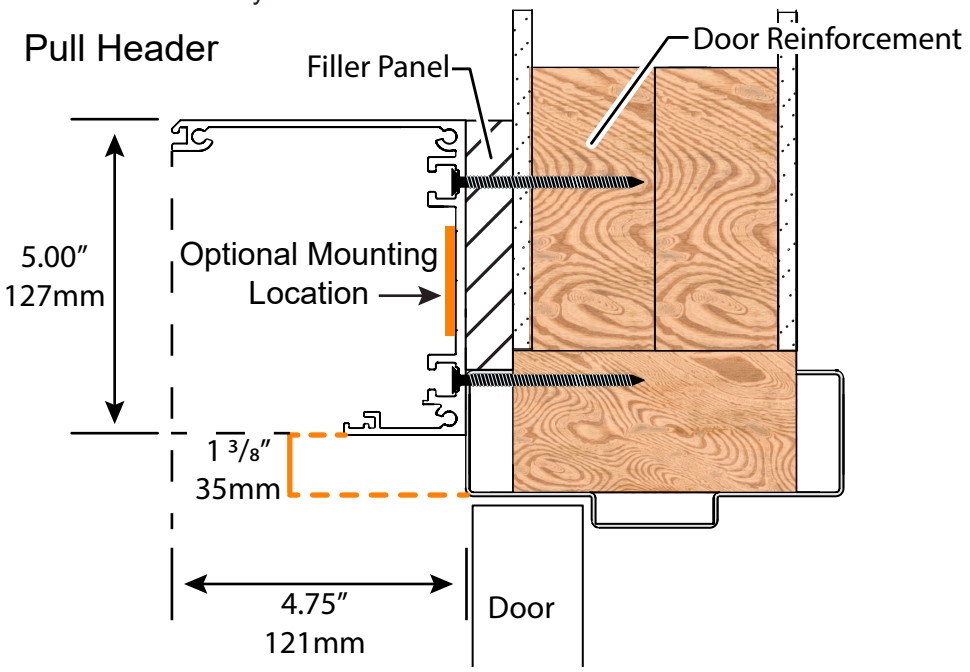

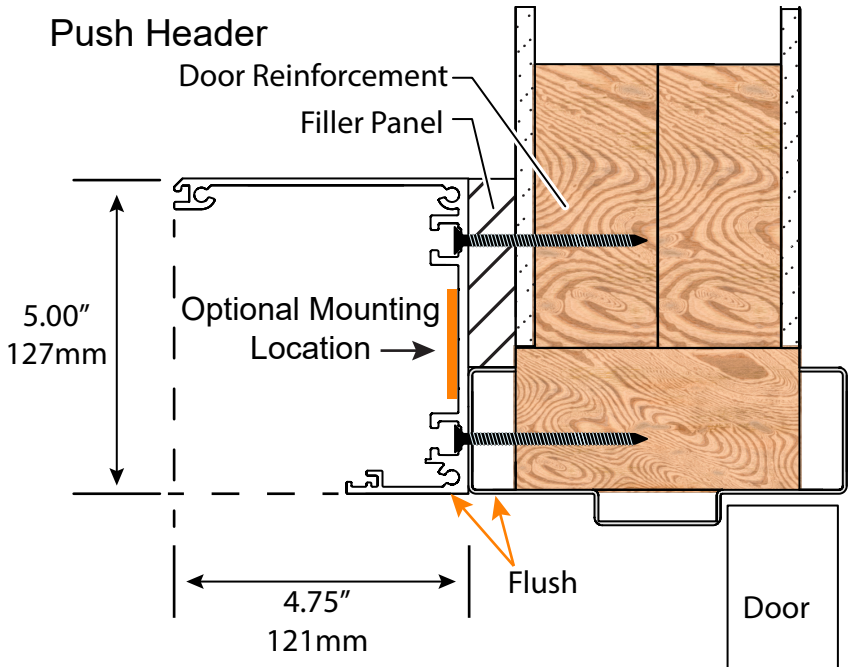

6. Reinstall the operator and the control board.

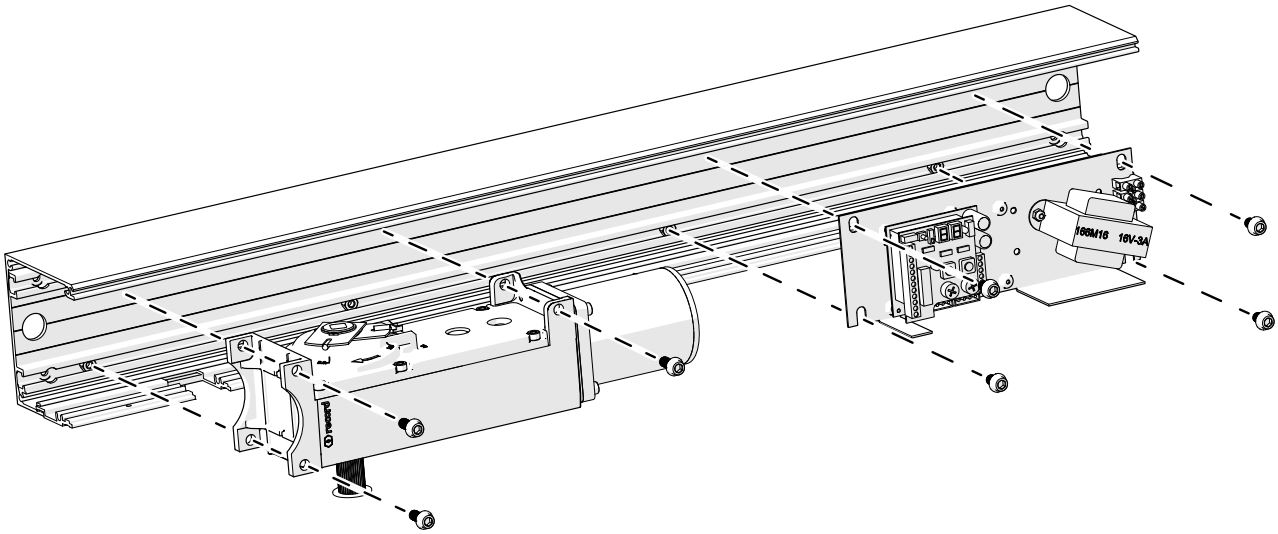

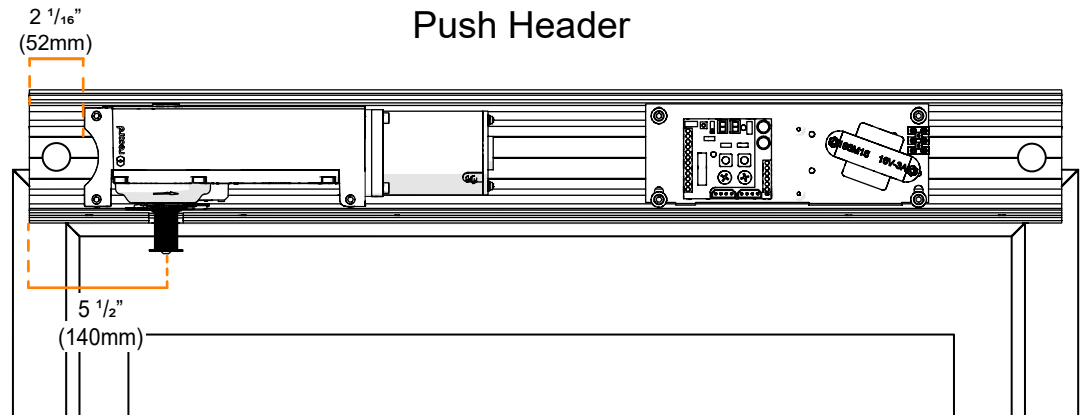

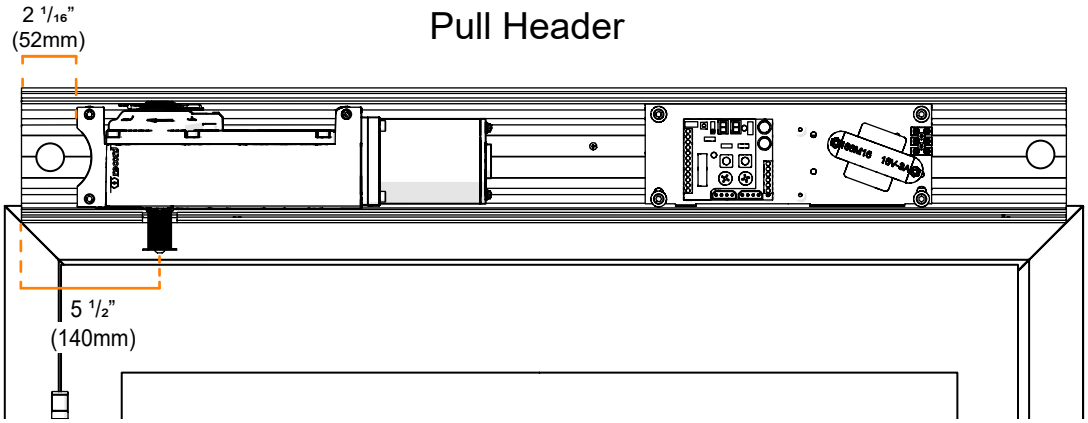

7. Reinstall the end caps.

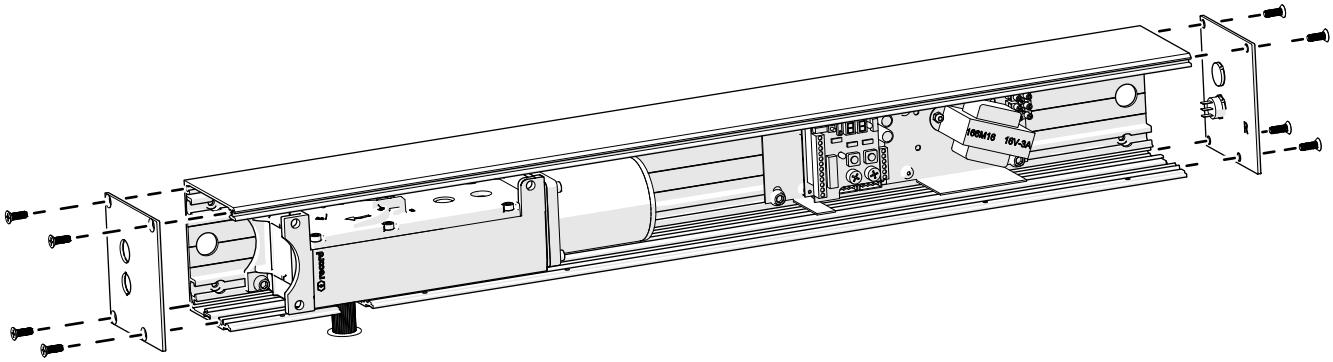

8. Connect the wiring.

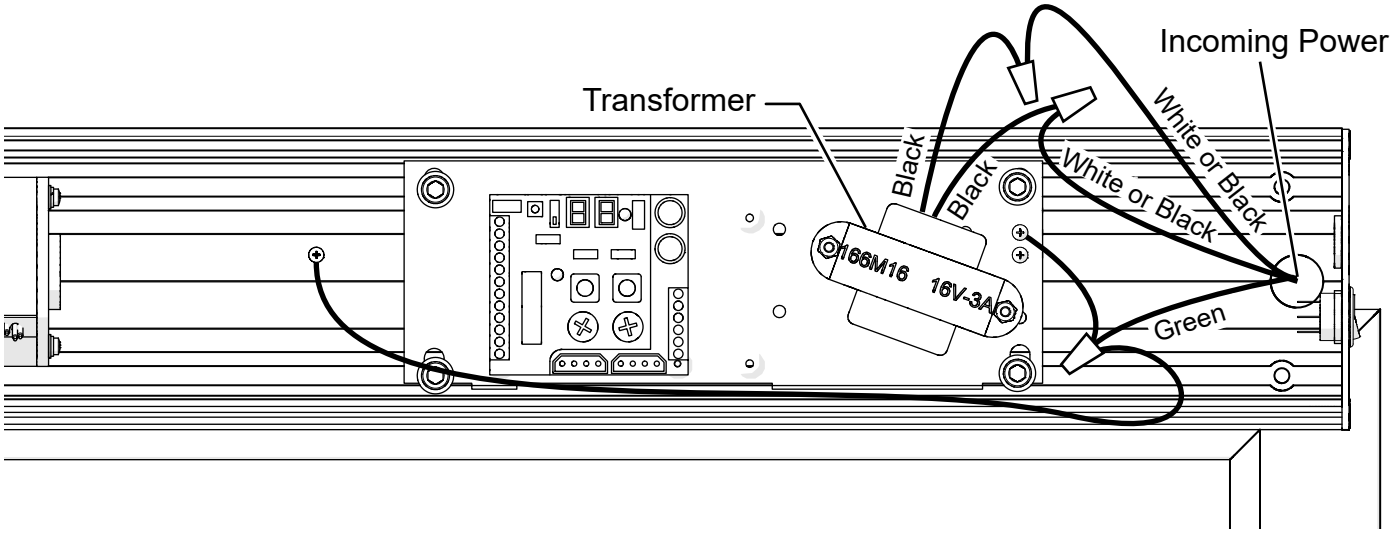

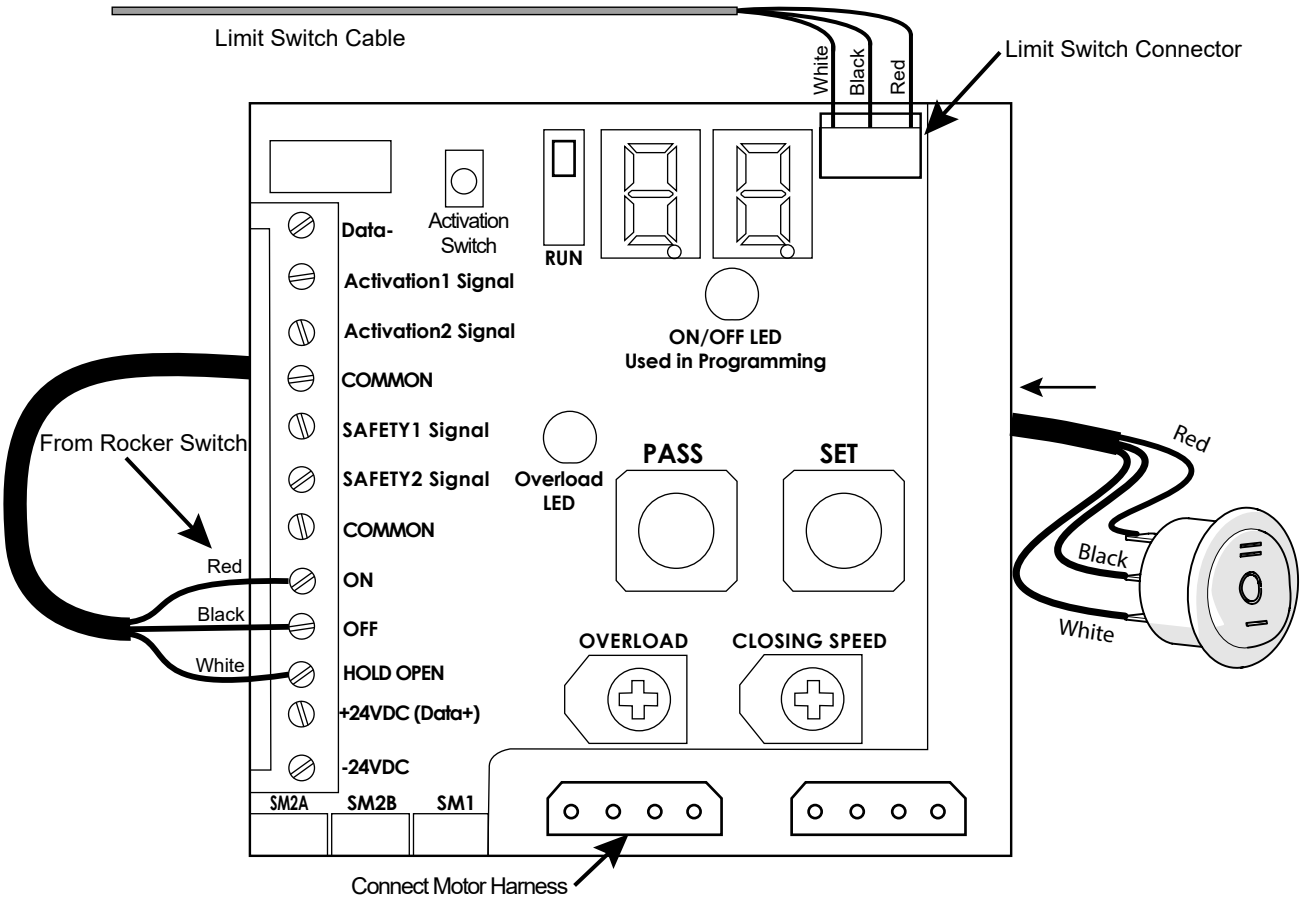
Limit Switch Cable
White
Black
Red
Limit Switch Connector
Activation Switch
RUN
Data-
Activation1 Signal
Activation2 Signal
COMMON
SAFETY1 Signal
SAFETY2 Signal
COMMON
ON
OFF
HOLD OPEN
+24VDC (Data+)
-24VDC
ON/OFF LED
Used in Programming
From Rocker Switch
Red
Black
White
Overload LED
PASS
SET
OVERLOAD
CLOSING SPEED
SM2A
SM2B
SM1
Connect Motor Harness
Red
Black
White

6. Install the Push and Pull Arm

6.1 Install the Push Arm

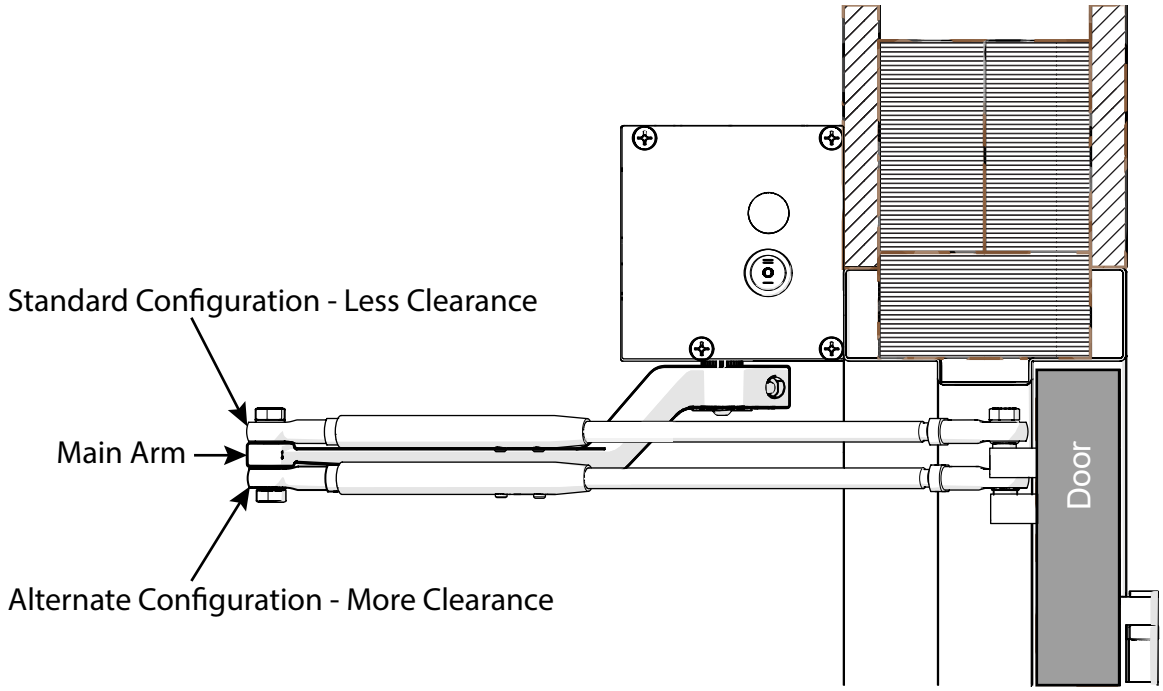

Push Arm Placement

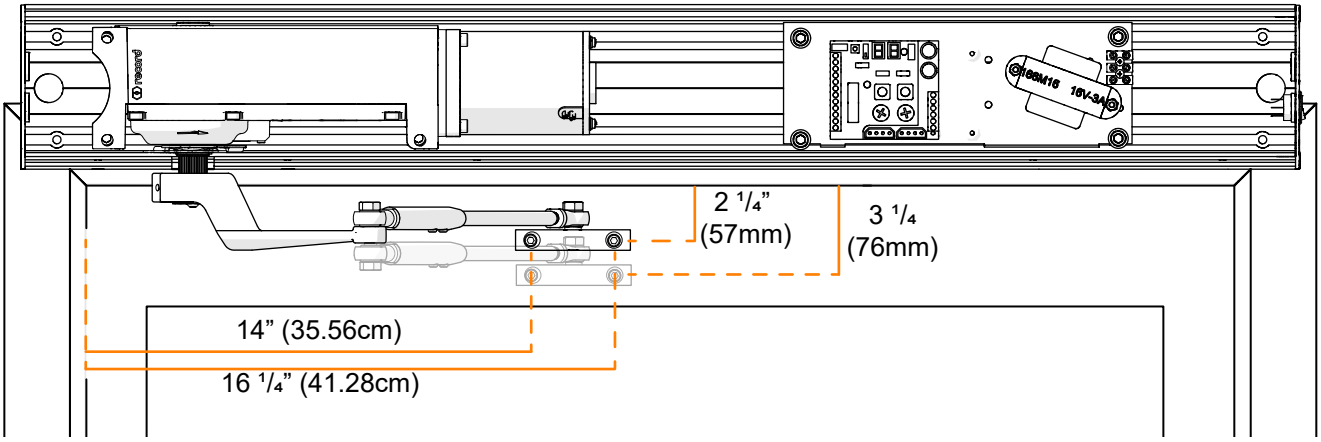

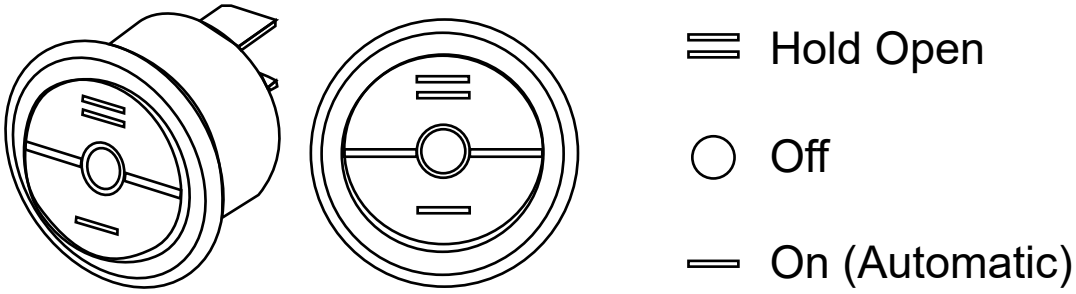

1. Mount the arm to the operator spindle and mount the shoe to the door.

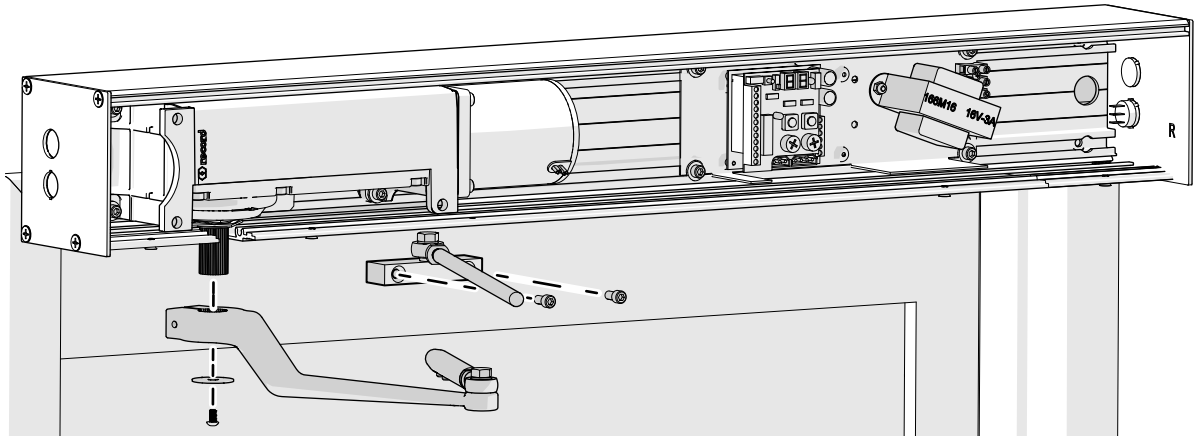

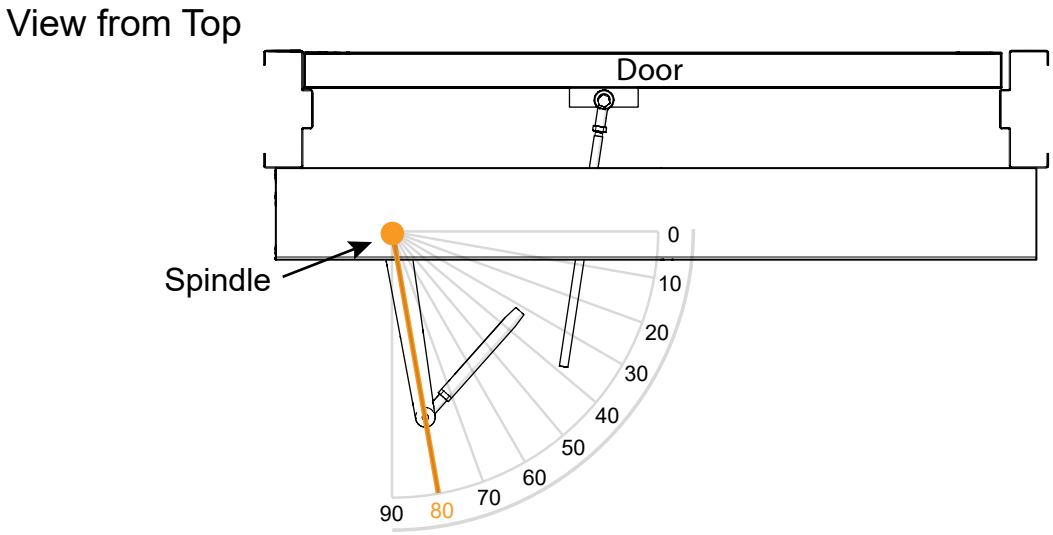

2. Align the rod and sleeve, mark a cut line and cut the rod to size.

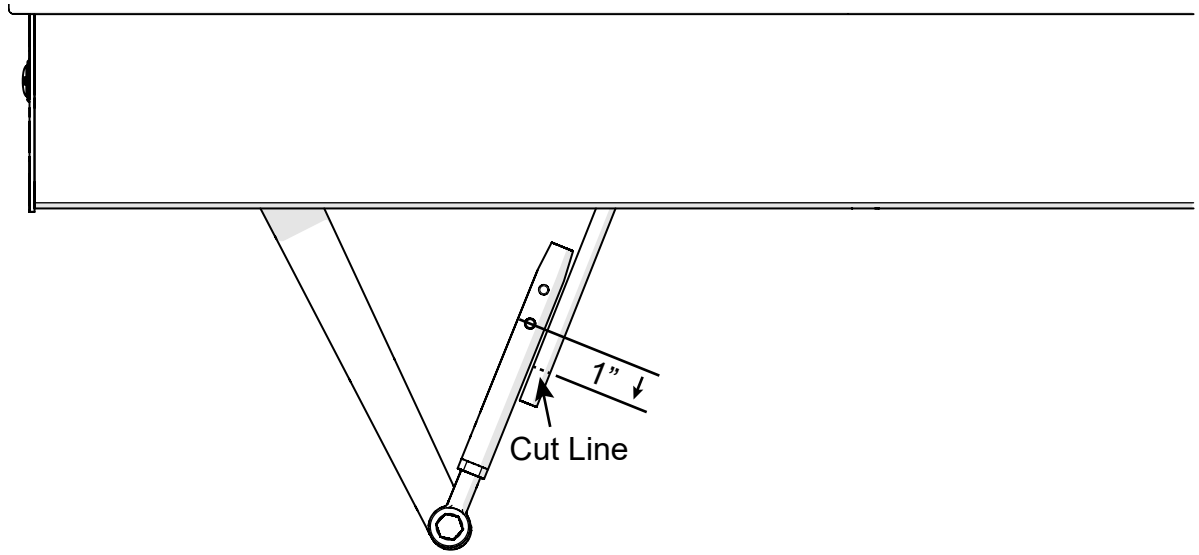

3. Insert the rod fully into the sleeve until it bottoms out. Then, tighten the set screws.

4. Loosen and remove the screw and washer securing the main arm to the spindle and remove the main arm from the spindle.

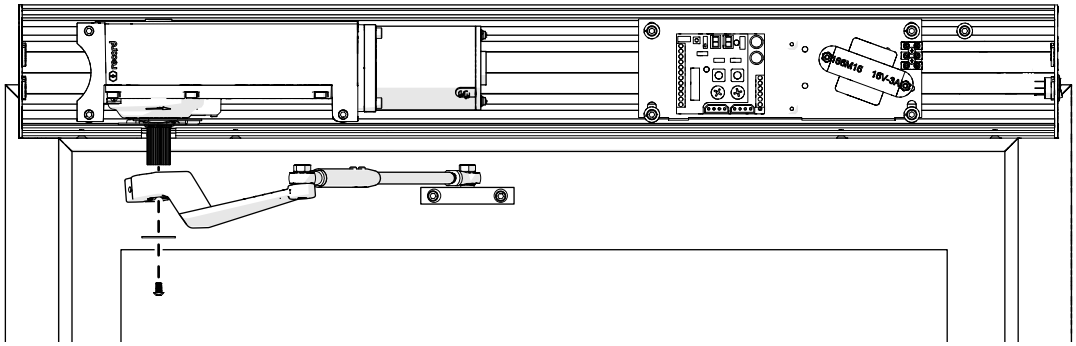

5. Disconnect the Reed Switch connector from the control unit.

6. Set the Operator Switch on the header to Hold Open.

7. Reconnect the Reed Switch connector to the control unit.

8. Align the Lower Limit Switch magnet with the Back Check reed.

9. Manually open the door and set the operator switch to Hold Open. With the door open, reinstall the arm to the operator spindle.

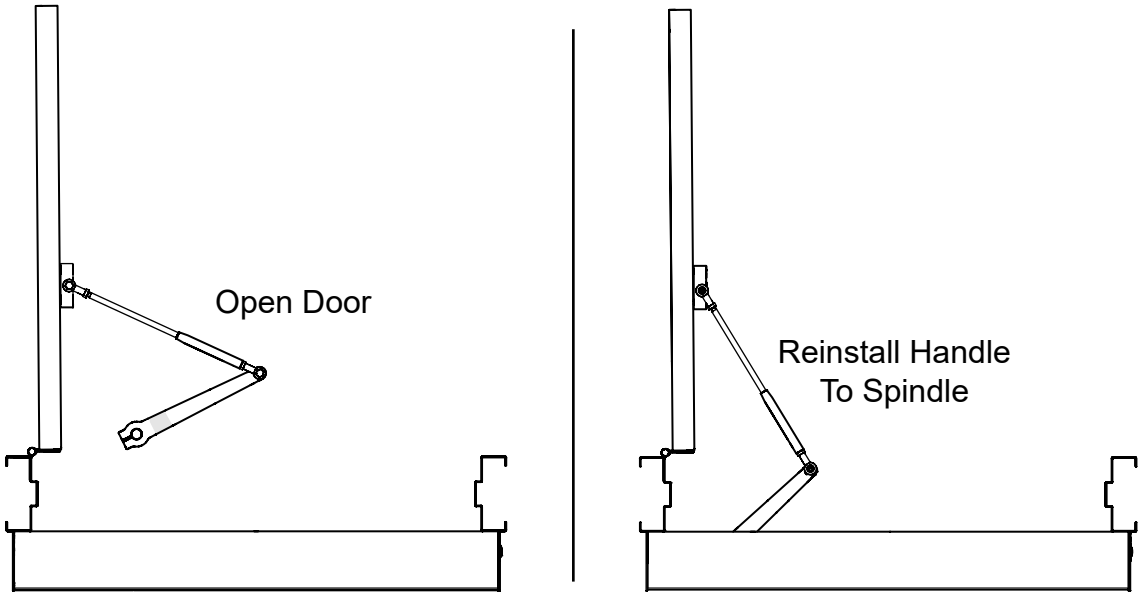

10. Reconnect the Reed Switch connector to the control unit.

11. Set the operator switch to Off and allow the door to close under spring pressure. After it has closed, set the operator switch to Automatic.

12. Test the operation of the door.

6.2 Install the Pull Arm

1. Assemble the roller to the universal pull arm assembly.

2. With the operator switch set to Off, position the universal arm on the spindle parallel to the door and mark the position on the door where the roller touches. Then measure 1” (25mm) towards the door handle side of the door and place another mark.

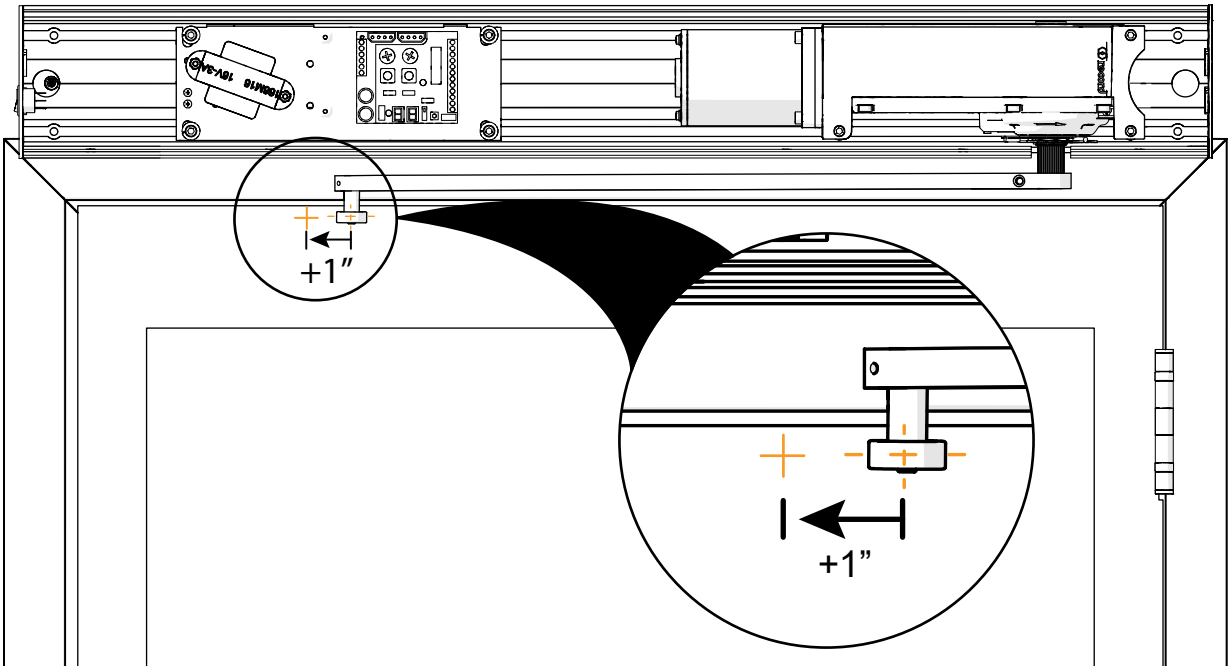

3. Remove the universal arm from the spindle.

4. Disconnect the Reed Switch connector from the control unit.

5. Set the Operator Switch on the header to Hold Open.

6. Reconnect the Reed Switch connector to the control unit.

7. Align the Lower Limit Switch magnet with the Back Check Reed.

8. Manually open the door to its fully-open position. Set the operator switch to Hold Open. Install the pull arm on the operator spindle in the fully open position and mark the location where the roller touches the door.

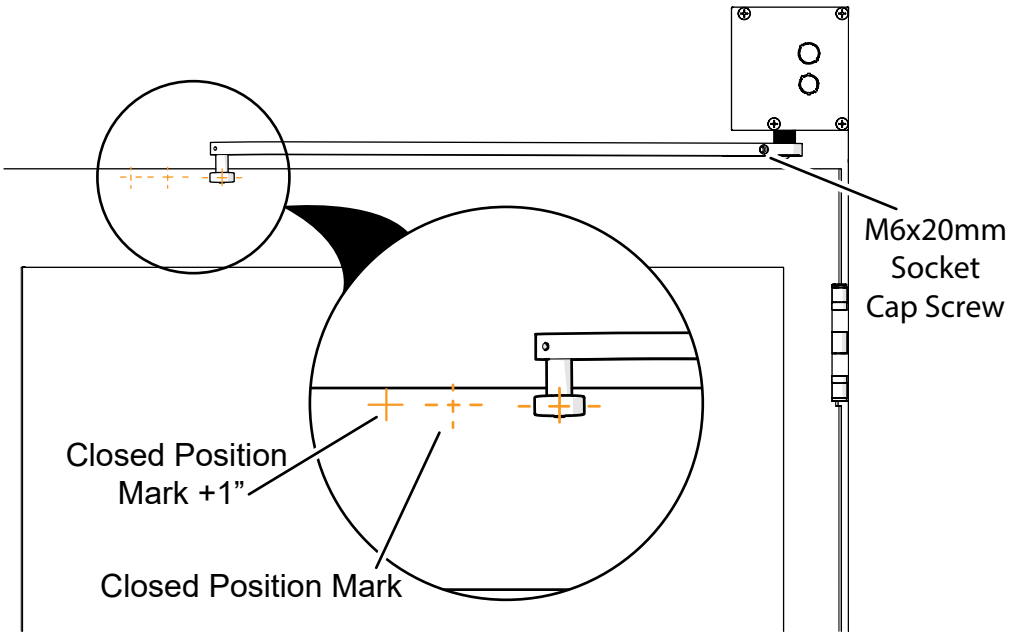

9. Manually close the door and set the operator switch to Off.

10. Remove the end caps from the pull track and position the roller into the track channel.

11. Level and align the track to the door ensuring the track covers all three marks and so that the roller is aligned vertically in the track.

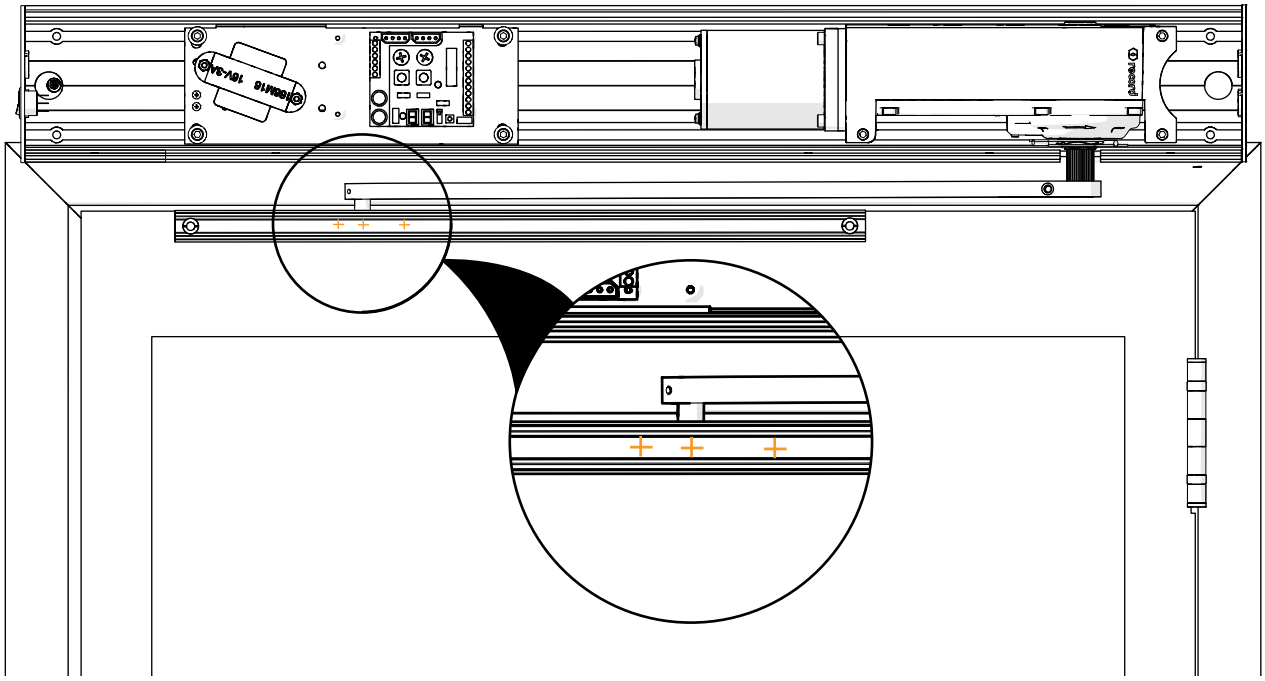

12. Mount the track to the door using the appropriate fasteners.

13. Install the beauty caps to the ends of the track.

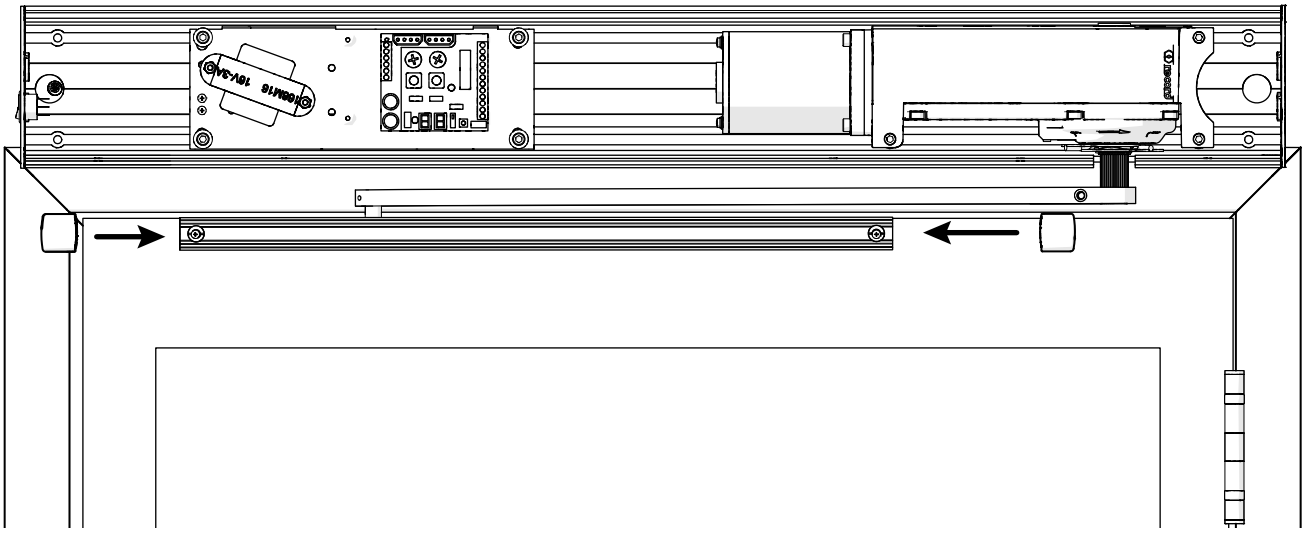

7. Operator Tuning

7.1 Setting Back Check and Latch Check

1. With the door fully closed, rotate the Upper Limit Switch until the Latch Check Magnet is pointing to the Latch Check (L.C.) mark on the housing..

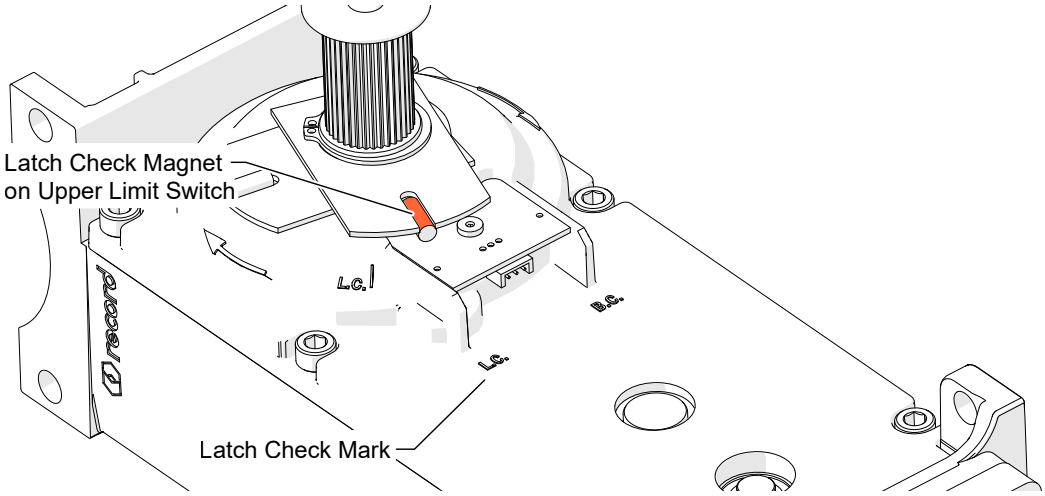

2. For doors that open to 90 degrees at full open, manually open the door to approximately 81 degrees.

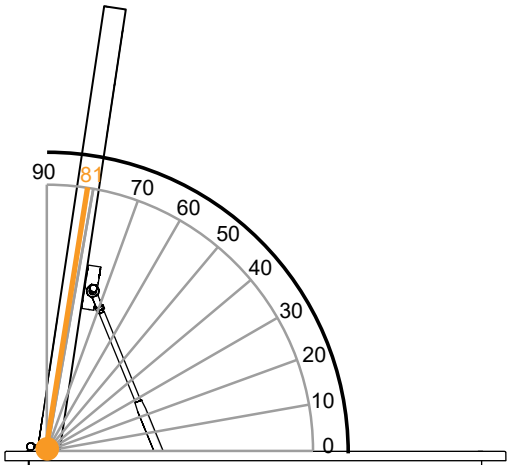

3. While holding the Upper Limit Switch in its current position, rotate the Lower Limit Switch until the Back Check Magnet points towards the Back Check (B.C.) markings on the housing.

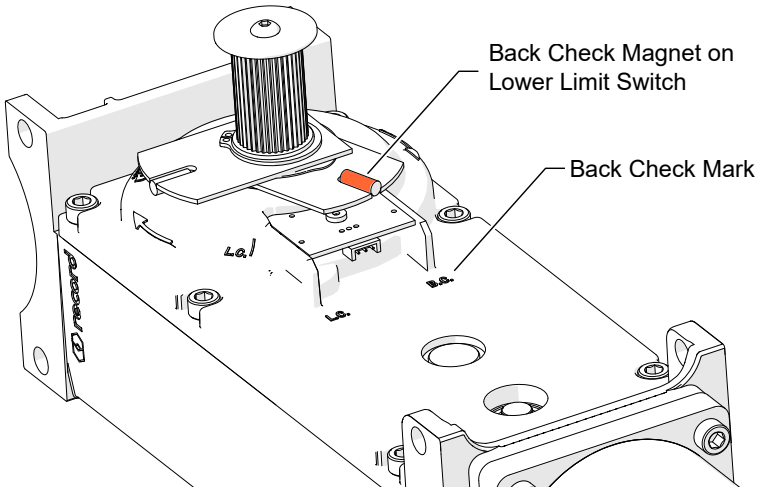

4. Test the operation of the door.

7.2 Spring Tension Adjustment

The torsion spring tension in the operator can be adjusted to compensate for windy conditions by providing increased closing force. This is accomplished by moving the internal stopper screw to a different position on the main gear. There are four (4) settings that incrementally increase the spring tension.

(1 = Small Tension Increase, 4 = Maximum Tension Increase)

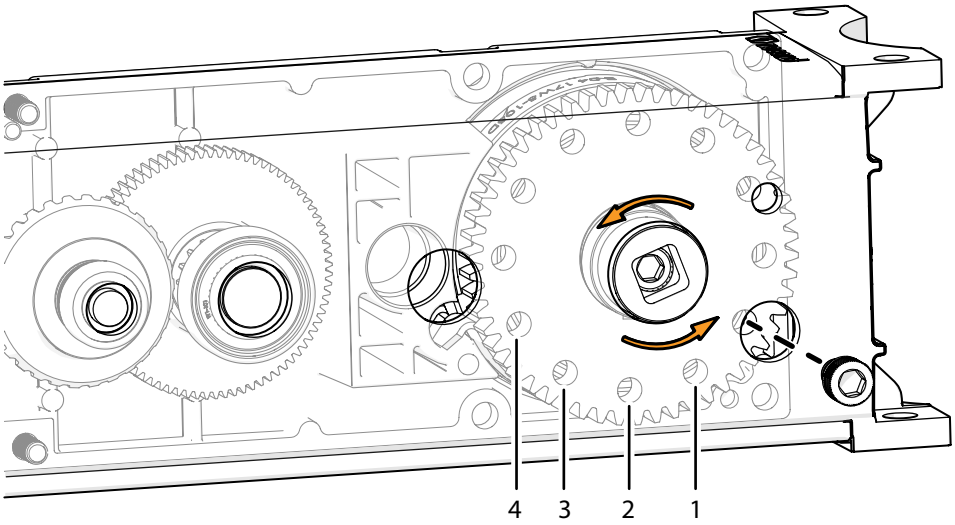

The Record Group (part of the ASSA ABLOY Group) is an industry-leading manufacturer of automatic door systems. Founded in Switzerland - Record has historically relied on combining its global presence with local reach to achieve customer satisfaction and success; pushing the boundaries of product innovation from the start, Record's product range today includes top-quality sliding doors, swing doors, and security entrance solutions. Record is proud to offer end-to-end entryway solutions to suit any business' individual needs.

www.recorddoors.com

Part of ASSA ABLOY