record

Installation Manual

Swing Door Operator

HA8

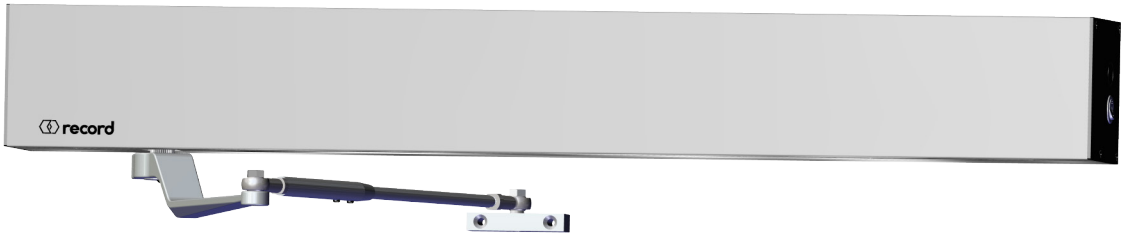

Scan the codes below for more information about the HA8 systems. Documentation can be found in the “Downloads” section on each product page.

USA

Record USA HA8 Product Page

Canada

Record Canada HA8 Product Page

Technical Support: (833) 921-1337

Document Identification:

Article Number: DOC-1672442

Version: 12.0

Publication Date: 2026-10-20

Content subject to change without notice.

Record as word and logo are trademarks owned by the ASSA ABLOY Group.

Copyright © ASSA ABLOY.

The Bluetooth® word mark and logos are registered trademarks owned by Bluetooth SIG, Inc. and any use of such marks by ASSA ABLOY is under license.

Table of Contents

1 Revision 6

2 Safety. 7

2.1 Presentation of Warning Signs 7

2.2 General Hazards 8

3. Component Identification 9

3.1 Typical Door Installation 9

3.2 Replacement Parts. 10

3.3 Replacement Fasteners 10

3.4 General Information 11

3.5 Door/Frame Preparation 11

3.6 Suggested Fasteners for the Frame 11

3.7 Suggested Fasteners for the Door 12

3.8 Shipping Inspection 12

3.9 Safety Precautions 12

4. Specifications 13

4.1 Compliance Codes and Standards 13

4.2 Technical Specifications 14

4.3 Required Tools for Installation 14

4.4 Door Handings 15

4.5 Consideration of Surroundings 16

4.5.1 Floor Space Requirements for Wheel Chair Maneuvering - ADA 16

4.6 Electrical. 17

5. Operator Installation. 18

5.1 Preinstallation 18

5.2 Mounting the Header 20

5.2.1 Overview 20

5.2.2 Operator Layout and Handing 22

5.3 Handing Modification - Left-to-Right or Right-to-Left 25

5.3.1 Left Hand Push - Identification 25

5.3.2 Left Hand Pull - Identification. 26

5.3.3 Right Hand Push - Identification 27

5.3.4 Right Hand Pull - Identification 28

5.4 Header Installation 29

5.4.1 Mounting the Left Hand Push Header 29

5.4.2 Mounting the Right Hand Push Header 37

5.4.3 Mounting the Right Hand Pull Header . . . 44
5.4.4 Mounting the Left Hand Pull Header . . . 53
6. Electrical Connections . . . 61
7. Arm Installation . . . 63
7.1 Push Arm Components and Configurations . . . 63
7.1.1 Standard Configuration . . . 64
7.1.2 Alternate Configuration . . . 72
7.2 Pull Arm Components and Configurations . . . 79
7.2.1 Pull Arm Installation . . . 80
7.2.2 Push Arm Installation . . . 88
8. Operator Tuning . . . 96
8.1 Back Check and Latch Check Adjustment . . . 96
8.2 Spring Tension Adjustment . . . 98
8.2.1 Setting the Spring Tension . . . 99
9.0 Door Operating Mode . . . 101
9.1 Basic Operation . . . 101
9.2 Operation Switch . . . 101
9.2.1 Automatic Mode (I) . . . 101
9.2.2 Hold Open Mode (II) . . . 102
9.2.3 OFF (Manual) Mode (0) . . . 102
10. Control Unit Settings . . . 103
10.1 Digital Board Diagram . . . 103
10.2 Digital Board Wiring . . . 104
10.3 Digital Board Specification . . . 105
11. Control Unit Programming . . . 106
11.1 Programming Specification (Digital Board) . . . 106
11.2 Overload (Opening Torque Adjustment) . . . 108
11.2.1 Overload POT - Basic Setting Position for a Standard Door . . . 108
11.2.2 Reset to Default Setting . . . 111
11.3 Safety Monitoring . . . 112
11.3.1 Setup . . . 112
11.4 Safety Sensor Connection - BEA Bodyguard . . . 114
11.5 Safety Sensor Connection - BEA Superscan . . . 115
11.6 Safety Sensor Connection - Optex OA-FLEX . . . 116
12. Troubleshooting . . . 117
13. ADA Adjustments . . . 118

13.1 Low Energy Operator Adjustment to ANSI A156.19 Standard . . . 118
13.1.1 Opening Speed . . . 118
13.1.2 Closing Speed . . . 118
13.1.3 Latch Check . . . 118
13.2 Adjustments for ADA (Americans with Disabilities Act) . . . 119
13.3 Detection of an Overload . . . 119
14. Completing the Installation . . . 120
14.1 Additional Components: Sensor(s) / Knowing Act Devices . . . 120
14.1.1 Safety Sensors . . . 120
14.1.2 Activation Devices . . . 120
14.1.3 Jamb-Mounted Switches . . . 120
14.1.4 Push Plate or Knowing Act Devices . . . 121
14.1.5 Electric Strike . . . 121
14.2 Header Cover Installation . . . 121
14.3 Safety Decals . . . 123

1 Revision

Pages	Revision	Date	Comments
	1		Original Release
68, 77, 84, 92, 96, 97, 98	2	2026-10-20	Updates

2 Safety

2.1 Presentation of Warning Signs

DANGER

Warning against an imminent or latent hazardous situation that can lead to electric shock and cause serious injury or death.

DANGER

Warning against an imminent or hazardous situation that can lead to severe injury or death.

WARNING

Warning against latent hazardous situations that can lead to severe injuries or death and cause substantial property damage.

CAUTION

Warning against a potential hazardous situation that can lead to minor personal injury and property damage.

NOTICE

Useful advice and information to make sure of a correct and efficient workflow of the system.

2.2 General Hazards

The system can cause hazards even when it is used as intended.

To reduce the risk of malfunction, damage to property or injury to persons, and to avoid dangerous situations, the safety instructions listed here must be observed. Save this manual for future reference.

The specific safety instructions in the other sections of this manual must also be observed.

DANGER

Risk of personal injuries or property damages.

- Install only on a properly operating and balanced door. A door that is operating improperly could cause severe injury. Before installing the operator, have qualified service personnel make repairs to cables, and other hardware.
- Before installing the operator, remove or make inoperative, all locks (mechanically and/or electrically interlocked to the power unit), all activation units and accessories that may be connected to the door.
- A commercial/industrial door operator that has exposed moving parts capable of causing injury to persons or employs a motor deemed indirectly accessible by virtue of its location above the floor shall include:
  - Install the door operator at least 2.4 m (8ft) or more above the floor, and/or
  - If the operator must be installed less than 2.4 m (8ft) above the floor, then exposed moving parts must be protected by covers or guarding provided by the operator manufacturer.
- The control unit MUST be located: (1) within the sight of the door, and (2) at a minimum height of 1.5 m (5ft) above the floors, landings, steps, or any other adjacent walking surface and (3) away from all moving parts of the door.
- Install the Entrapment Warning Placard next to the control station in a prominent location if applicable.
- To reduce the risk of injury to persons - Use this system only with pedestrian doors.
- Do not connect the operator to a power supply until instructed to do so. Connection of the high voltage supply should be done by a qualified professional and within the guidelines of the enforced local electrical codes.
- HIGH VOLTAGE (INCOMING 115 VAC) WIRES AND LOW VOLTAGE WIRES CANNOT SHARE THE SAME ACCESS HOLE. HIGH VOLTAGE WIRES MUST BE ROUTED AND SECURED AWAY FROM ALL LOW VOLTAGE WIRES.

3. Component Identification

3.1 Typical Door Installation

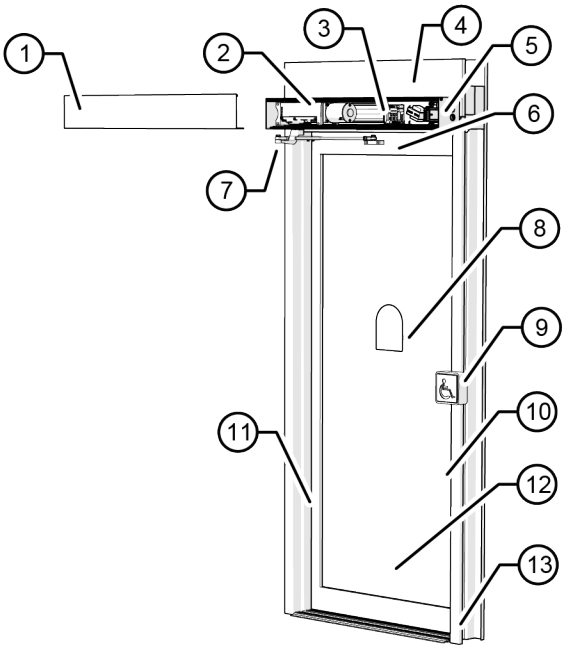

	Description
1	Header Cover
2	Operator
3	Control Unit
4	Backing Material (for reinforcement)
5	Header Body
6	Door Mounted Sensors (Optional)
7	Arm and Track
8	ANSI Stickers
9	Knowing Act Device (Inside and Outside)
10	Strike Stile
11	Hinge Stile
12	Swing Door
13	Door Frame

3.2 Replacement Parts

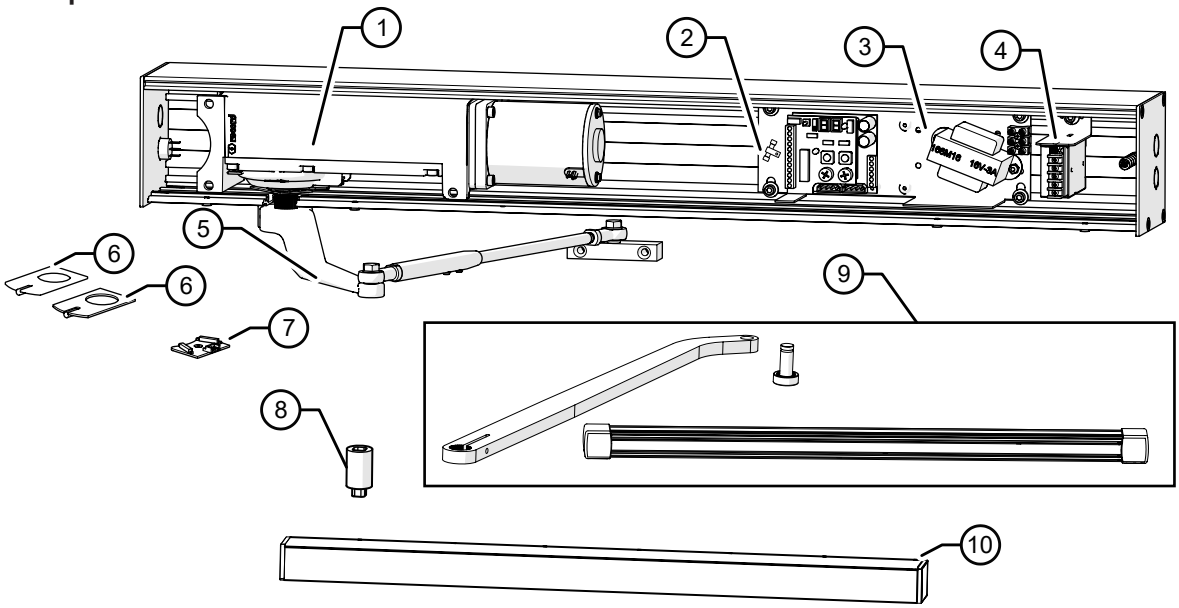

	Category	Part Number	Description
1	Operator	WL-PA05	Operator (Non-Handed)
2	Fuse	W5-421	Fuse 3AMP Analog Board
		W5-422	Fuse 3AMP Digital Board
3	Control Unit	W7-130-1	HA Digital Control Unit
4	Power Supply Kit (Optional)	WL-PWRKIT	RS-25-24 Power Supply Kit
5	Push Arm	W7-200	Complete Push Arm-Clear (with 17.5” rod)
		W7-205	Complete Push Arm-Black (with 17.5” rod)
		W5-500C	Extended Rod 22”- Clear
		W5-500B	Extended Rod 22”- Black
6	Limit Switch Magnet	WL-PA30	Operator Limit Switch with Magnet
7	Reed Switch	WL-P0068	Operator Reed Switch
8	HA8 & HA9 Spindle Extension	W8-865	HA8 & HA9 Spindle Extension (with ⁵/16”-18x5-¹/4” SCS)
9	Pull Arm Assembly	W7-260	HA8 & HA9 Pull Arm with 22” Pull Track Clear Kit
		W7-270	HA8 & HA9 Pull Arm with 22” Pull Track Bronze-Black Kit
10	Reveal Spacer	W8-863-S1	Spacer assembly - Silver
		W8-863-BLK	Spacer assembly - Black
	Reed Switch Cable	W5-415-1	Reed Switch Cable
	Hardware Kit	W5-641-1	Hardware Kit

3.3 Replacement Fasteners

Parts	Descriptions
5/16”-18 x ½” Serrated Flange SHCS, Silver Dacromet Coated	Mounting Screws for Gearbox and Control Unit
5/16”-18 x ¾” Serrated Flange SHCS, Silver Dacromet Coated	
5/16”-18 Standard Nut, Zinc Plated	Nut for mounting items onto Header
10-32 x 5/16” Undercut Phillips Flat Head Machine Screw, Zinc Plated	Header Cover Screw

Parts	Descriptions
¼”-20 x ¾” Undercut Type F Thread Cutting Phillips Screw, Black Zinc Plated	Header End Plate Screw
5/16”-18 x 4” SHCS, Black Zinc Plated	Bolt for Spindle
¼” x 1 ¼” Fender Washer, Zinc Plated	Washer for Spindle
#10-32 x 3/8” Button Head Hex Drive, Zinc Plated	Small screw for Spindle
5/16”-18 x 5 ¼” SHCS, Black Zinc Plated	Bolt for Spindle Extension
Push Arm Screws	Not Included
Pull Arm Screws	Not Included

3.4 General Information

The HA8 Operator is a complete swinging door solution for push, pull, surface applied installations. The header contains the Driving system (Motor), Torque production (Gearbox), and a Control system to interlink the two.

The HA8 Operator can be used with presence sensors to ensure safety. It is easy to install for both new construction and retrofit applications.

NOTICE

All wiring must conform to standard wiring practices in accordance with national and local wiring codes.

NOTICE

The door must swing freely through the entire opening and closing cycle before beginning the installation process.

CAUTION

An incorrectly installed or improperly adjusted door operator can cause property damage or personal injury. These instructions should be followed to avoid the possibility of misapplication or maladjustment.

NOTICE

All dimensions are given in inches (millimeters) unless otherwise noted.

3.5 Door/Frame Preparation

- Before installation, verify that the door frame is properly reinforced and is well-anchored in the wall.
- Concealed electrical conduit and concealed switch or sensor wires should be pulled to the frame before proceeding.

3.6 Suggested Fasteners for the Frame

- #14 x 2-3/4” (70mm) long sheet metal screws.

3.7 Suggested Fasteners for the Door

- #12, #14, Wood screws, Sheet Metal screws, Self-tapping screws of varying lengths depending on applications.

NOTICE

The fastener components listed above are merely suggestions. A technician should use his/her best discretion to determine what components will be needed to complete the job.

CAUTION

Do not use drywall screws or hollow wall anchors to mount the header.

3.8 Shipping Inspection

Verify that the order was shipped complete and correct, including model number, door handing, color and header width.

NOTICE

If any of the above items are not correct, do not attempt to install this system until all conditions are correct.

Report any incorrect items to the general contractor immediately.

CAUTION

No claims for shortages will be allowed unless reported within 24 hours of receipt of shipment.

3.9 Safety Precautions

To avoid bodily injury, material damage and malfunction of the product, the instructions contained in this manual must be strictly observed during installation, adjustment, repairs and service, etc. Training is needed to carry out these tasks safely. Only Record-trained technicians should be allowed to carry out these operations.

CAUTION

- Do not climb or put weight on any door or header parts.
- Do not allow children to play with the operator or the electrical control unit.
- Keep remote controls away from children.
- Keep all power off to the unit when performing any work or maintenance.

4. Specifications

4.1 Compliance Codes and Standards

The operator complies with the following codes and standards:

- UL STD.325 & ANSI/BHMA STD. A156.19; 3-Hour Fire rated UL STD. 10 (b); UL STD. 10(c); NFPA STD. 252
- CAN/CSA STD. C22.2 NO. 247 & CAN/ULC STD. S104

CAUTION

Under no circumstances shall the certification label of the HA8 operator be tampered, modified or removed.

CAUTION

It is the responsibility of the final installer and/or installation company to certify that the final completed operator is installed in accordance with local building codes and applicable laws.

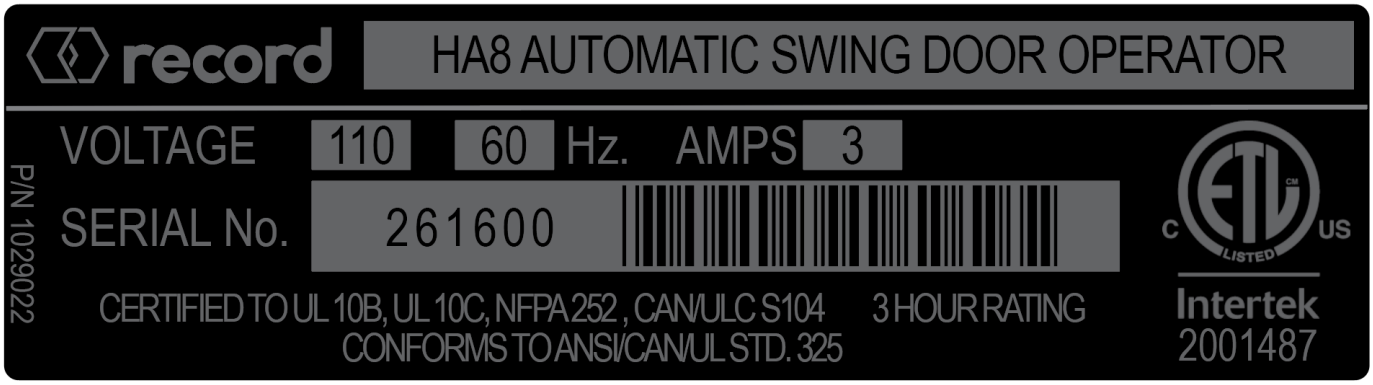

4.2 Technical Specifications

Dimensions	4.75” (121mm) W x 5” (127mm) H
Weight	Approx. 45 lbs.
Power Supply	115 ± 5VAC, 60Hz, 3A
Consumption	DC16V/ 3 AMP
Motor	1/8 hp, 24VDC, 3.2A (Standard)
Rated Operation	Continuous opening and closing cycles
Manual Opening/Closing Force -during power failure	Opening Force: 15 lbs; Closing Force: 25lbs
Door Opening/Closing Speed & Force	Adjustable: refer to section “ADA Adjustments” for more information
Operation - during power failure	Low resistance when opened by hand. Door closes by spring.
Hold Open	Pulsed Energy to Motor. No overheating. Continuous hold open.
Operating Environment	Ambient temperature -4F to +120F (-20C to +50C). No condensation or icing. Ambient humidity 30% to 85% RH (No hazardous materials may be present in the atmosphere)
Maximum Door Weight	250 lbs
Maximum Door Width	48”
Reveal for Push Application	0” to 14”
Reveal for Pull Arm Application	0” to 2 ³/8”

4.3 Required Tools for Installation

- Allen Wrench Set
- Power Drill and Drill Bits
- Level
- Tape Measure
- Wire Stripper
- Screwdrivers: Flat, Philips, 5/16” Hex Nut
- Additional fasteners depending on surface conditions
- Shims
- Hand Saw/Power Saw

4.4 Door Handings

The handing and types of each operator are shown in the figure below. The black dot indicates the spindle location. The HA8 Operator can be used for pull-side and push-side installation on the top of the door jamb.

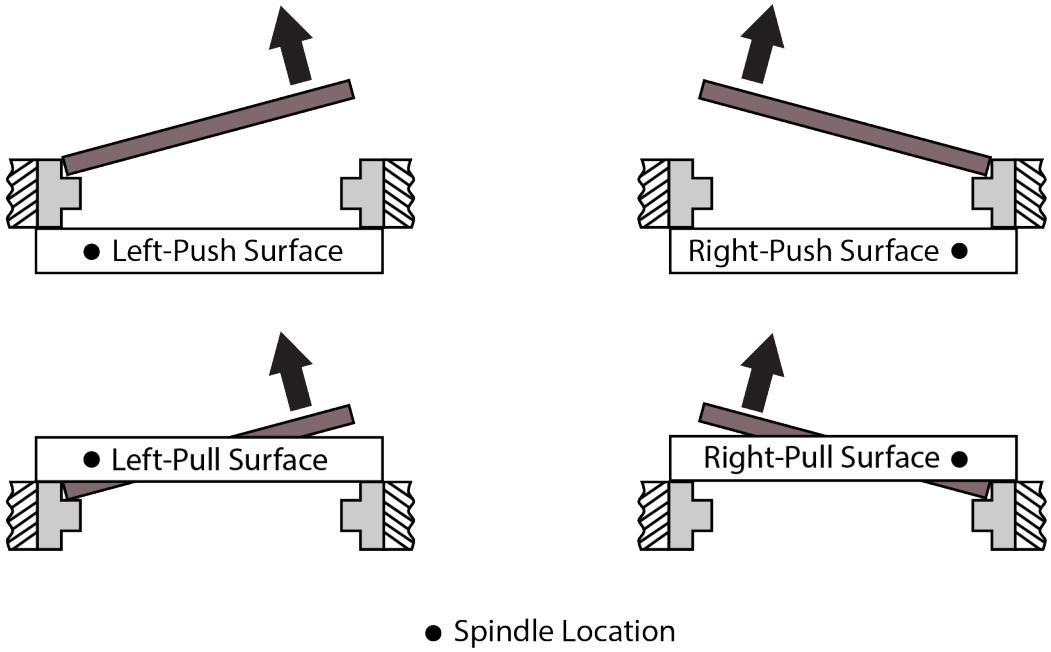

4.5 Consideration of Surroundings

4.5.1 Floor Space Requirements for Wheel Chair Maneuvering - ADA

The owner may request the activation device location; however, the press switch must be in view of the door and not directly on the door or frame. Please refer to ANSI 117.1 Safety Code for further guidelines on switch requirements.

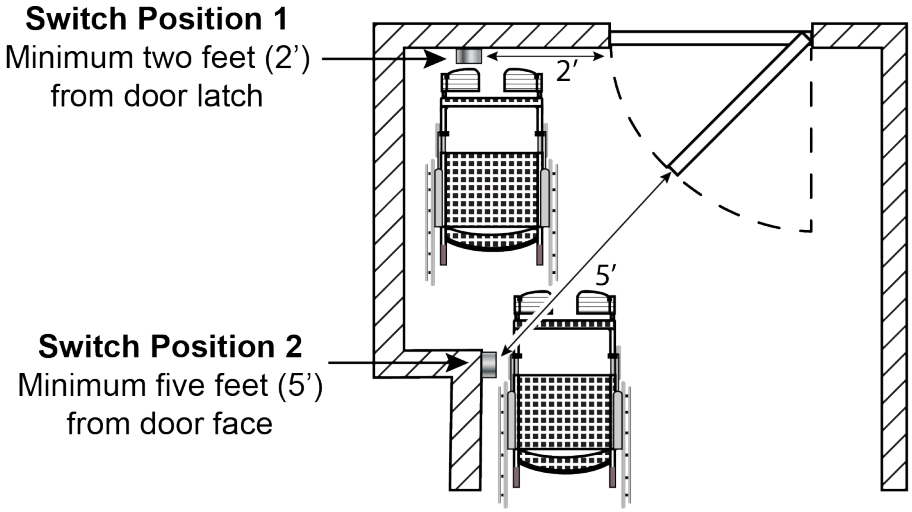

NOTICE

Activation switches must be installed at the minimum height of 34" (86.4cm) and maximum height of 48" (122cm) from finished floors or as specified by a local authority that has jurisdiction.

NOTICE

Individuals who use wheelchairs need a minimum of 48" clearance to the door swing paths for doors in sequence application.

Door Condition	Door must open easily and close (latch) without excessive force; weather stripping and threshold must not interfere with door movement.
Reveal	For out swing (Push) doors, the reveal must be within the range of 0" to 14". For in swing (Pull) doors, 0" to 2 3/8" for Pull Arm applications is allowed – for all others consult the factory.
Wind	When installing a door in a strong wind condition area, special adjustments should be made to the arm and doorstop position, to increase the spring tension.
Power/Control Wires	Check that the electrical feed, all conduits, and electrical junction boxes (for push plates or other activation devices, if required) are correctly located in accordance with final approved shop drawings and within the guidelines of the enforced local electrical codes.

4.6 Electrical

The 115±5VAC supply lines are connected to the black primary wires coming from the transformer and the ground wire is attached to the operator header box. Mount the ON/OFF/HOLD OPEN switch in the header end plates to the latch side of the unit (or closest to the control unit).

The control unit settings have been pre-set prior to shipment. It will be necessary for the door operator to be functional while adjustments and settings are made. A black push actuator is mounted on the upper left corner of the circuit board to ease in the adjustment process. Power up the unit, push an activating device and check to make sure that the spline pinion drive rotates in the correct direction. Keep all wires away from moving parts and sharp edges that may cut into the outer casing of the wires.

NOTICE

Installation of a L-16 connector for armor (Bx) cable/incoming power (to secure the line to the header) is recommended.

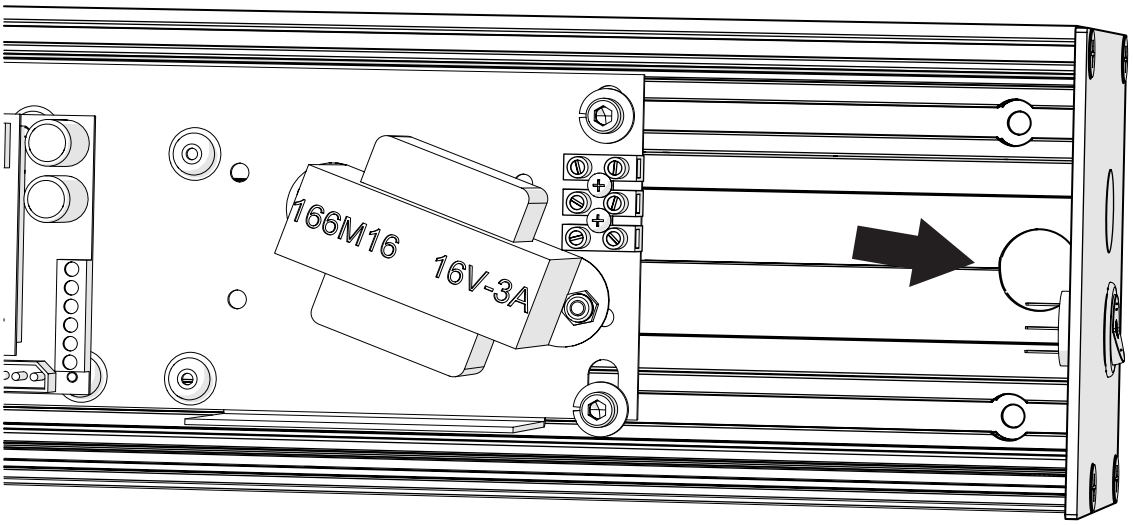

CAUTION

The ground wire for the incoming 115 ±VAC power and the system ground wire cannot share the same grounding stud. Ground the incoming 115 ±VAC accordingly.

- Installation of any extra wiring for controls or accessories into the header unit shall be secured and positioned away from any moving parts.
- If the motor is not plugged into the circuit board, there is no resistance against the spring when manually opening the door. The door or arm will close very quickly if opened.
- If an electrical access hole is added or knocked-out of the end plates, code approved electrical transfers must be used. The hole cannot be knocked out and unfilled.

5. Operator Installation

5.1 Preinstallation

Verify there is proper support in the wall to secure the header at both the vertical jambs and behind the header at intervals between the vertical jambs.

NOTICE

The door header must be able to support 200 lbs.

Make sure all power has been disconnected before handling the supply wires. The power supply may be pulled into the header at the same time the header assembly is positioned for installation.

CAUTION

To prevent injury, any handling of the supply wires should be done by a certified electrician and within the guidelines of the local electrical codes.

After unpacking the system, the header must be disassembled prior to mounting it to the wall. This will reduce the carrying weight and provide access to the header in case other mounting holes need to be drilled.

1. Loosen and remove the four (4) 10-32 x 5/16” screws securing the front cover to the header.

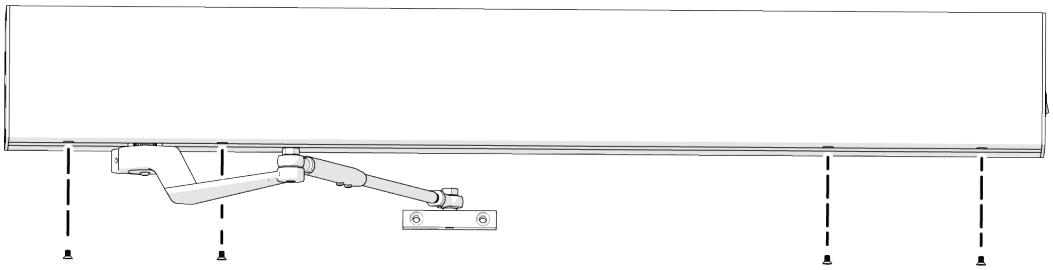

2. (1) Rotate the front cover upward and then (2) pull it away from the header.

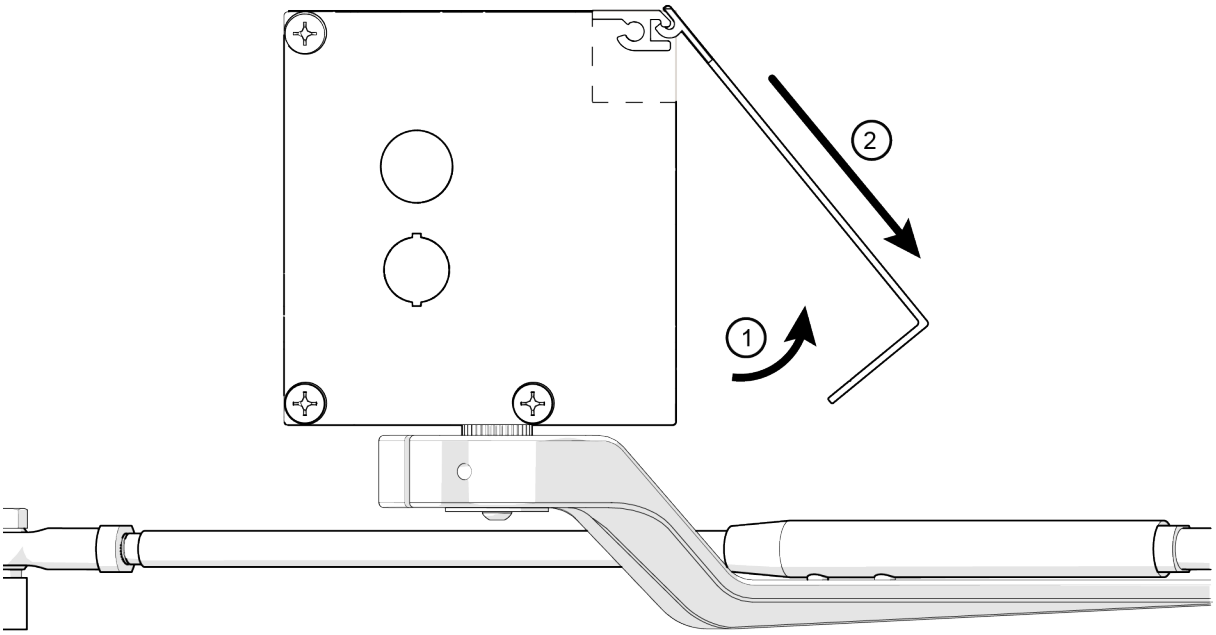

3. Using an Allen wrench, loosen and remove the three (3) 5/16”-18 x 3/4” bolts securing the operator to the ⁵/16” Hex Nuts in the header. Then remove the operator.

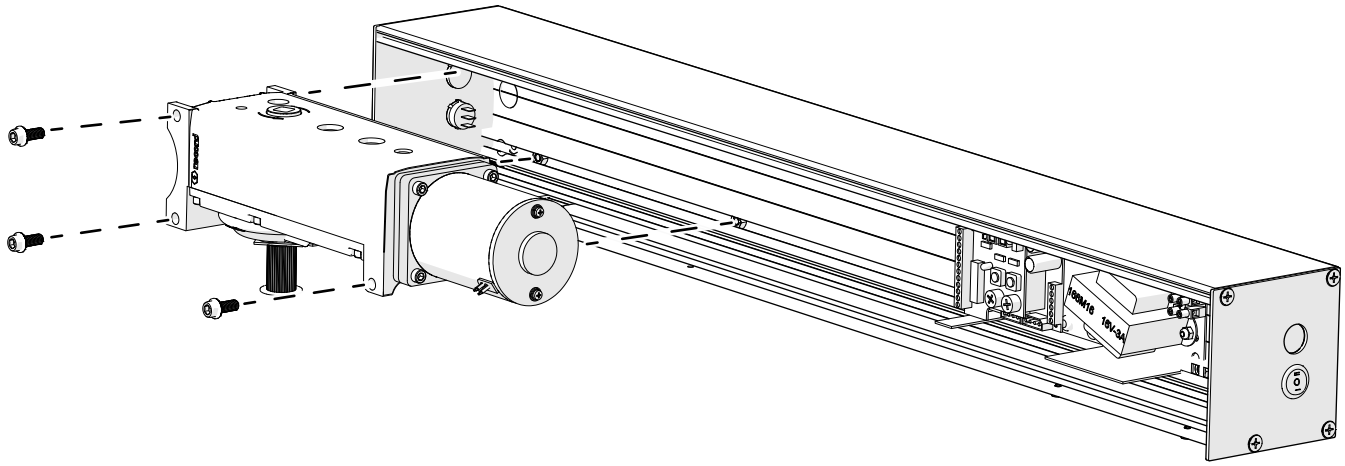

4. Loosen and remove the four (4) 5/16”-18 x 1/2” screws securing the control unit assembly to the header. Then, remove the control unit assembly.

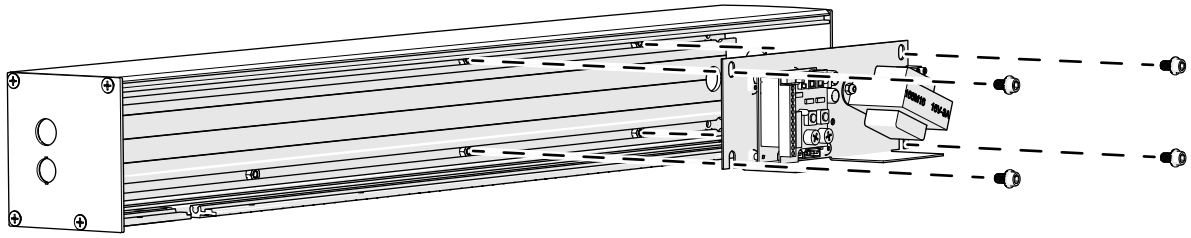

5.2 Mounting the Header

5.2.1 Overview

Verify the correct orientation of the operator.

- Left Push
- Right Push
- Left Pull
- Right Pull

The header must be anchored to the wall using a minimum of six (6) #14 x 1” Pan Quad Type A screws provided in the ship loose kit. Additional screws may be needed if your installation requires it.

Holes are provided on each side of the header to route the high voltage power wires. There are also two (2) locations on each header side plate where wiring conduit can be attached.

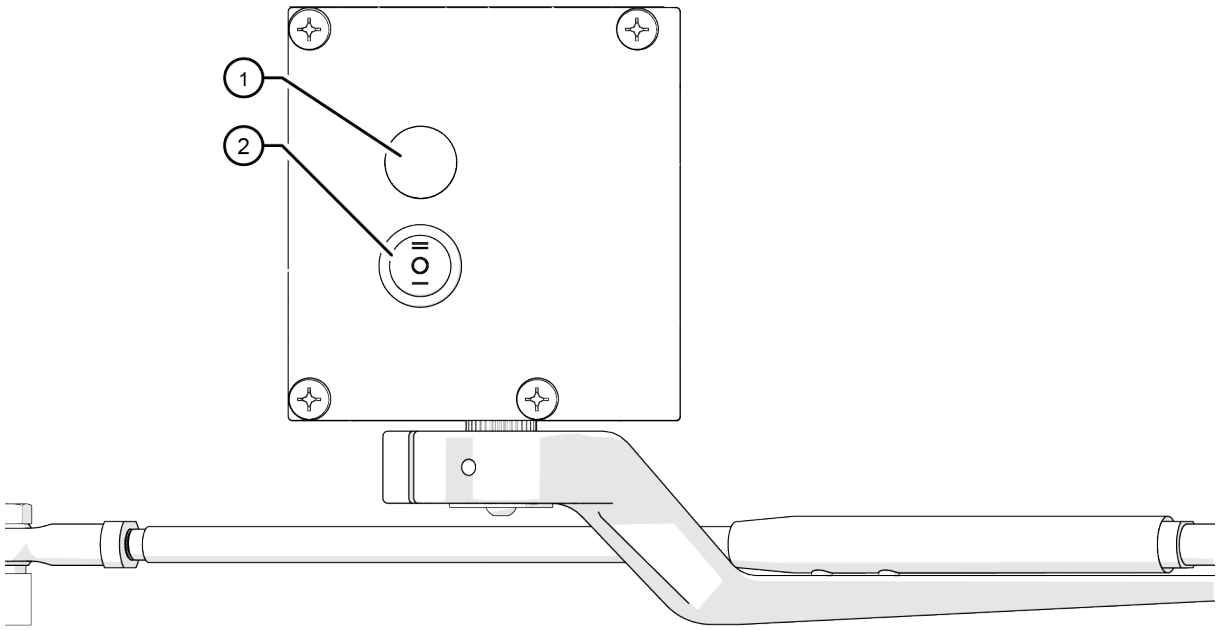

	Description
1	Wiring Conduit Mount
2	Operator Switch

NOTICE

It is recommended that the power cable is routed through the door latch side of the header.

NOTICE

There are two locations on each side that can be used. It is important to understand that the operation switch must be installed in one of the four locations.

There are also six (6) pre-drilled mounting holes to aid the installation of the header to the door frame and wall.

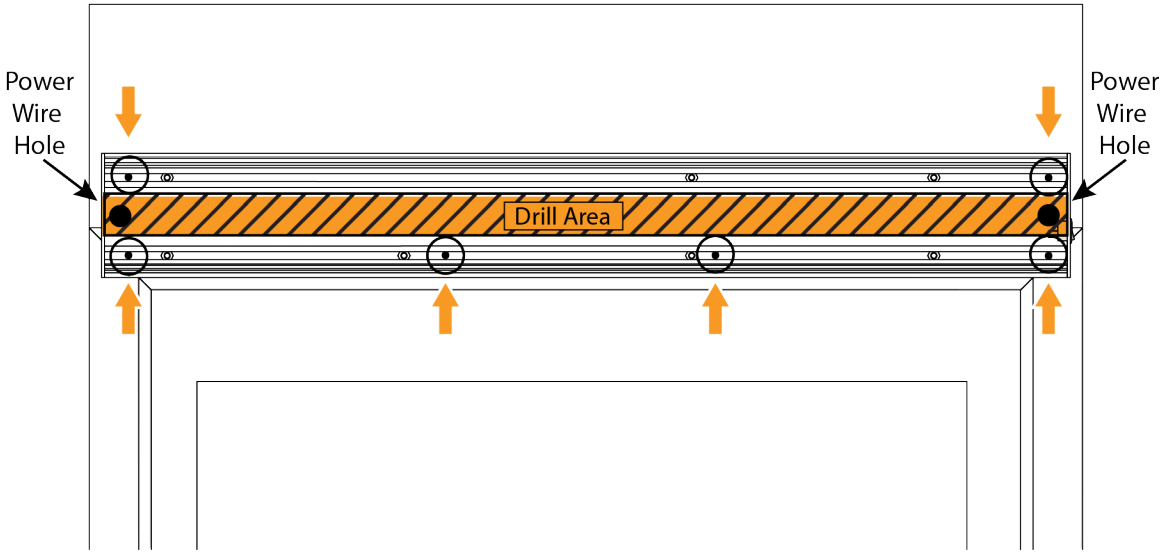

NOTICE

If a mounting hole is not in a convenient location, new holes can be drilled and bolts installed in the header in the area as shown above (Drill Area). The holes must be drilled into an area that can provide substantial support such as studs, blocks, and framing.

CAUTION

Do not use drywall screws or hollow wall anchors to mount the header.

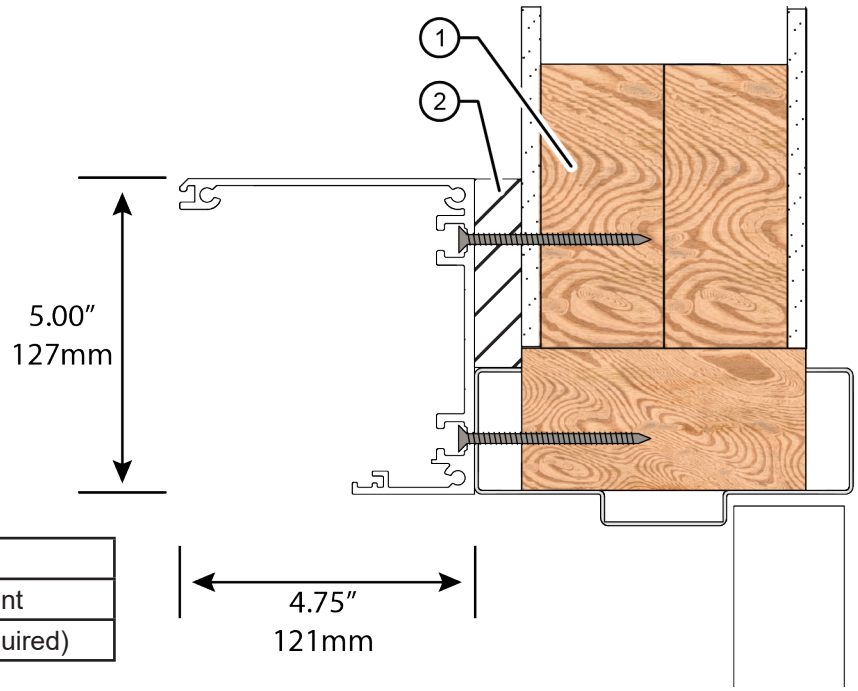

	Description
1	Door Reinforcement
2	Filler Plate (as required)

5.2.2 Operator Layout and Handing

View from Above

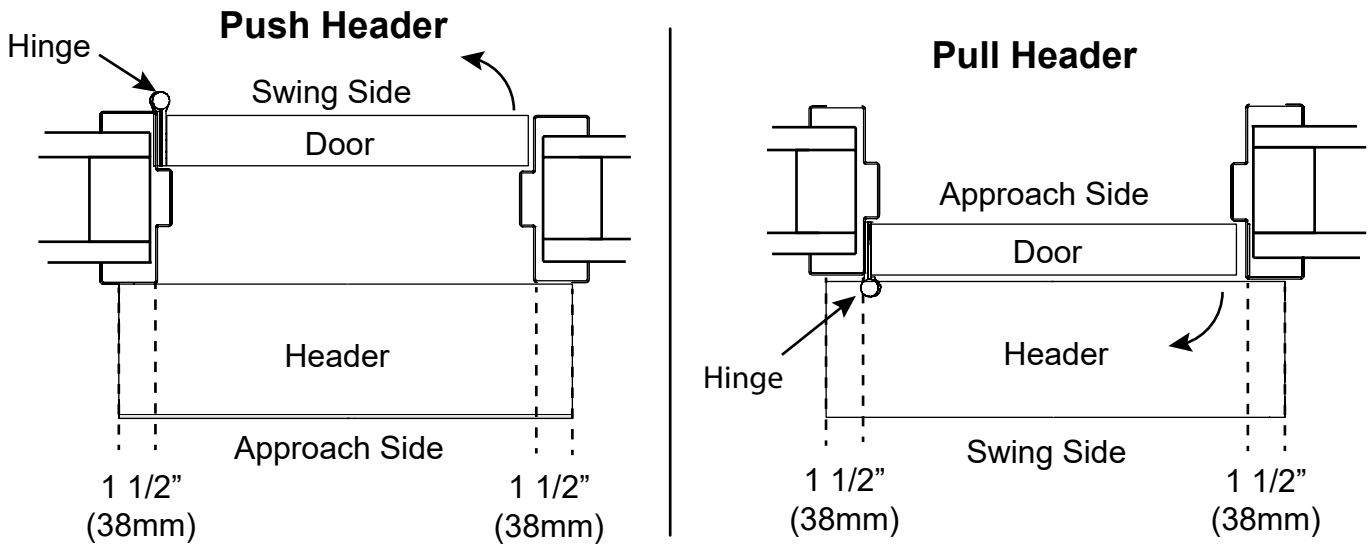

Profile View

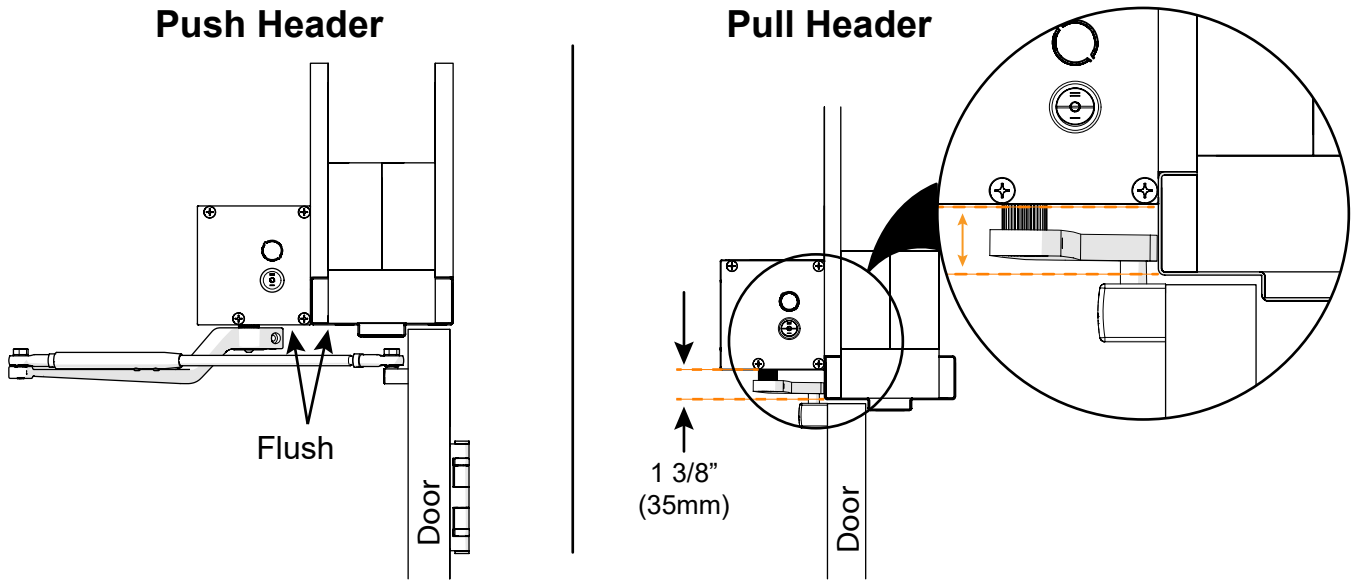

Double Egress Header

Double Egress Operators have a pull-type and push-type operator mounted in the same header. The header must be mounted 1 3/8” above the door frame.

Double Egress Push Configuration

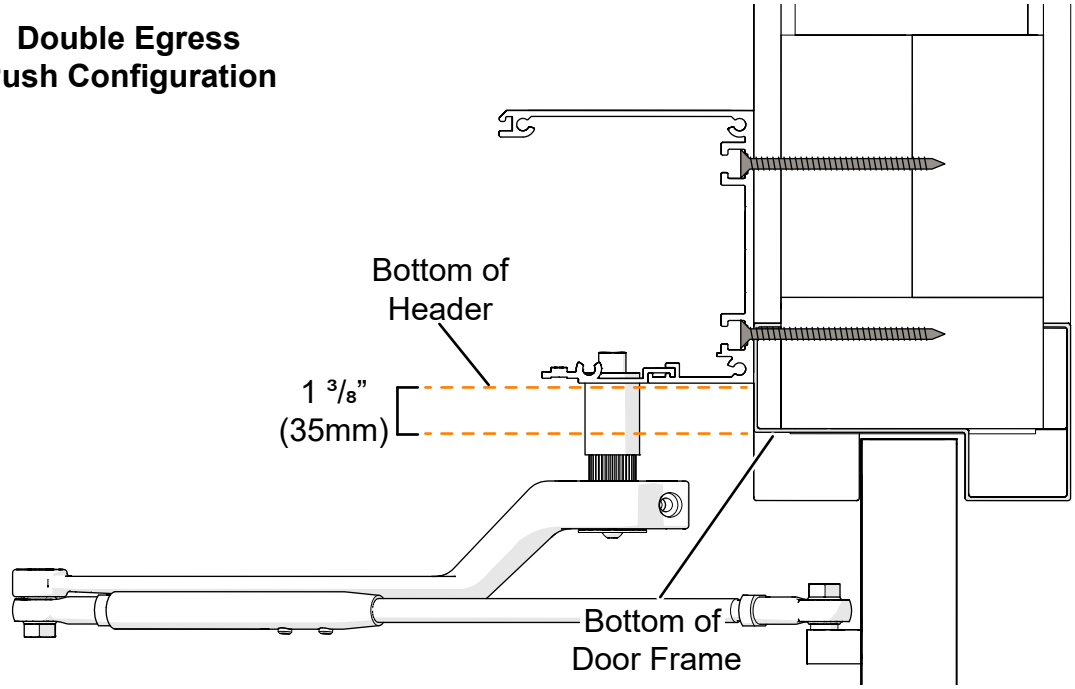

NOTICE

The Double Egress will require a spindle extension on the push side gearbox

NOTICE

The Double Egress will require the installation of a spacer between the track and the door. The spacer can be oriented vertically or horizontally depending on the requirements.

Double Egress Pull Configuration

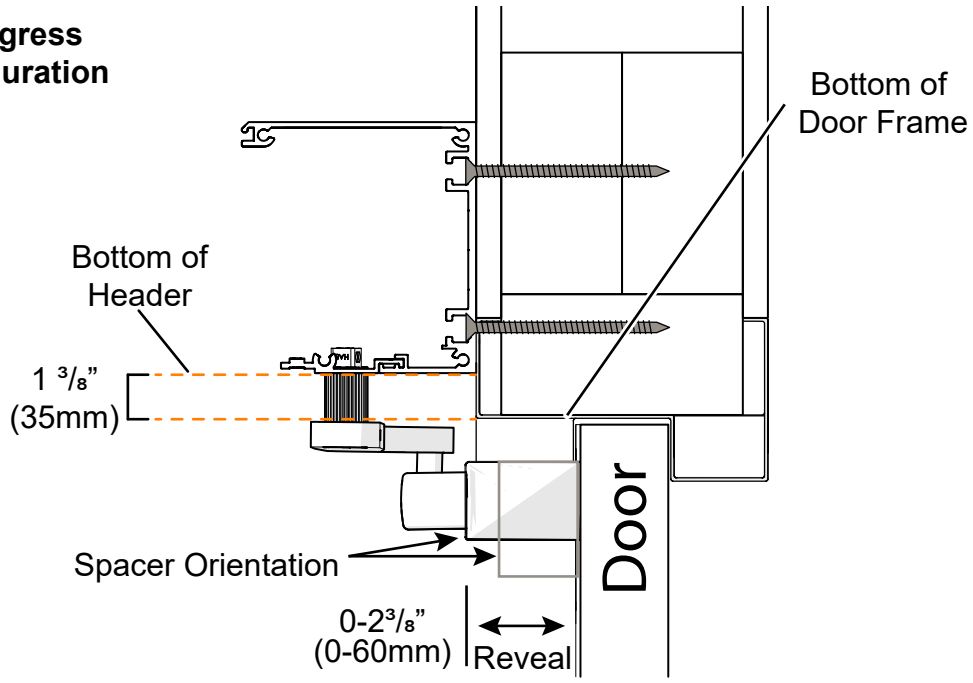

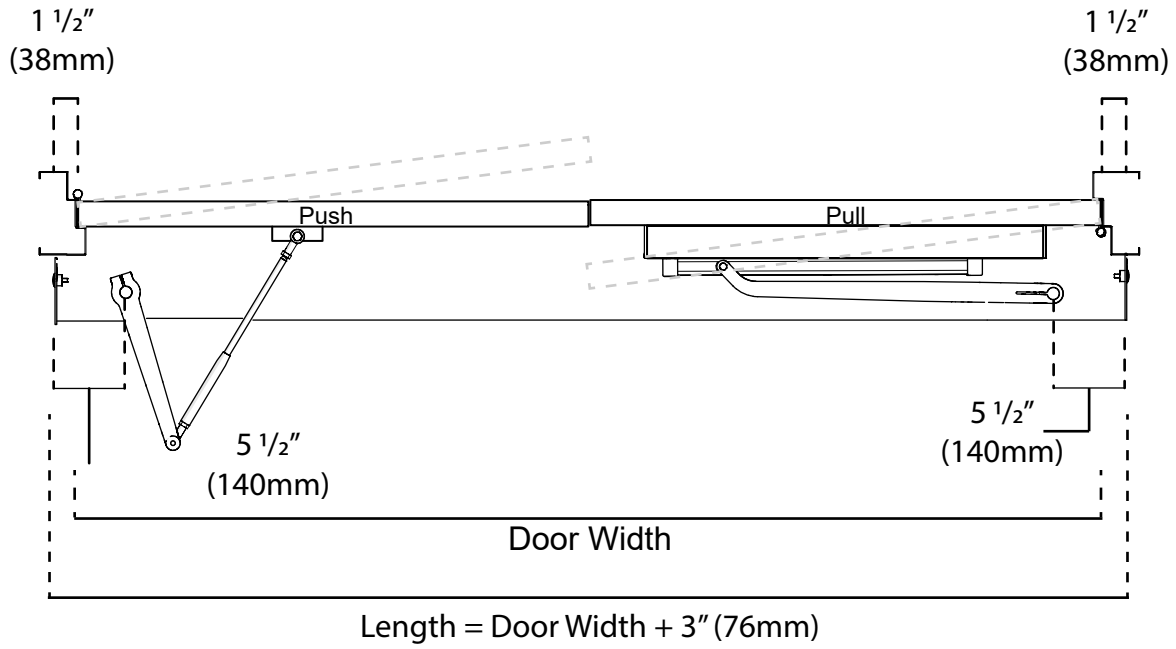

NOTICE

The center of the spindle should be located 5 1/2" from the vertical line of the hinge.

5.3 Handing Modification - Left-to-Right or Right-to-Left

If necessary, the system can be modified to change the handing. The arrows on the body of the operator indicate the opening rotation of the spindle.

5.3.1 Left Hand Push - Identification

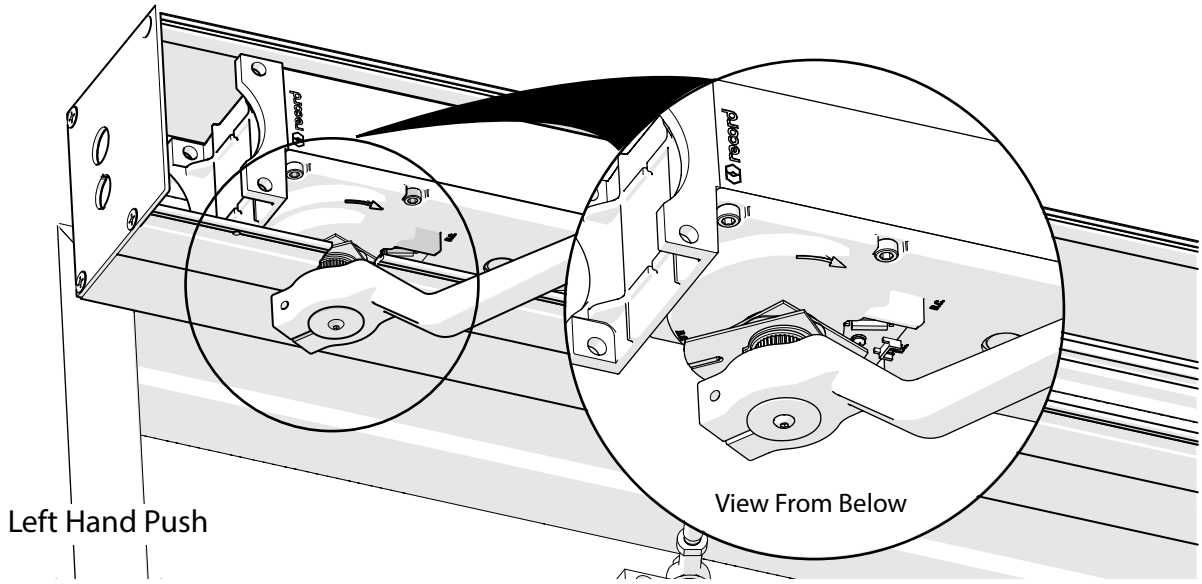

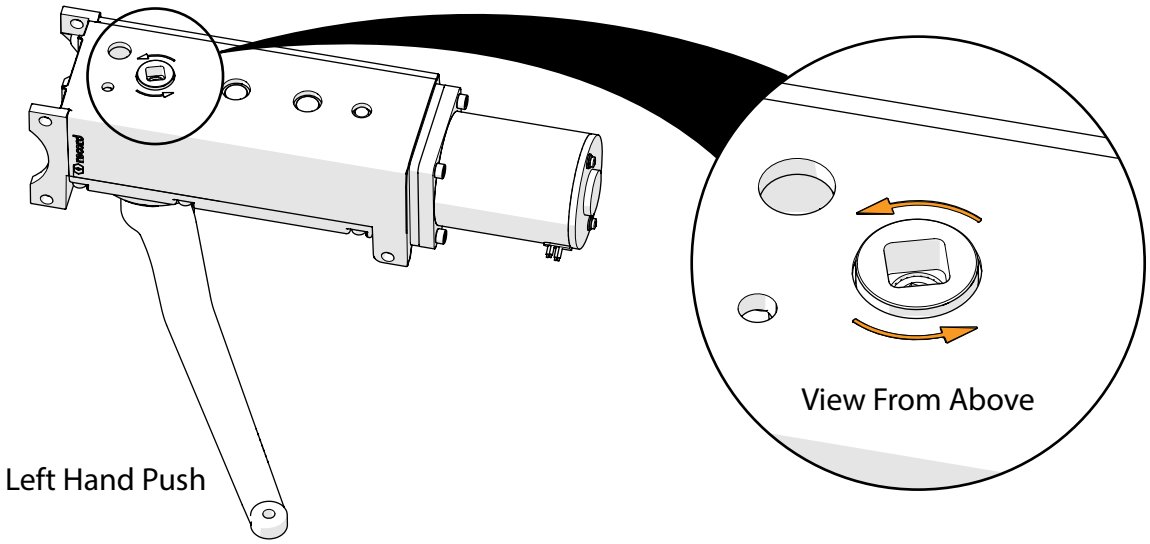

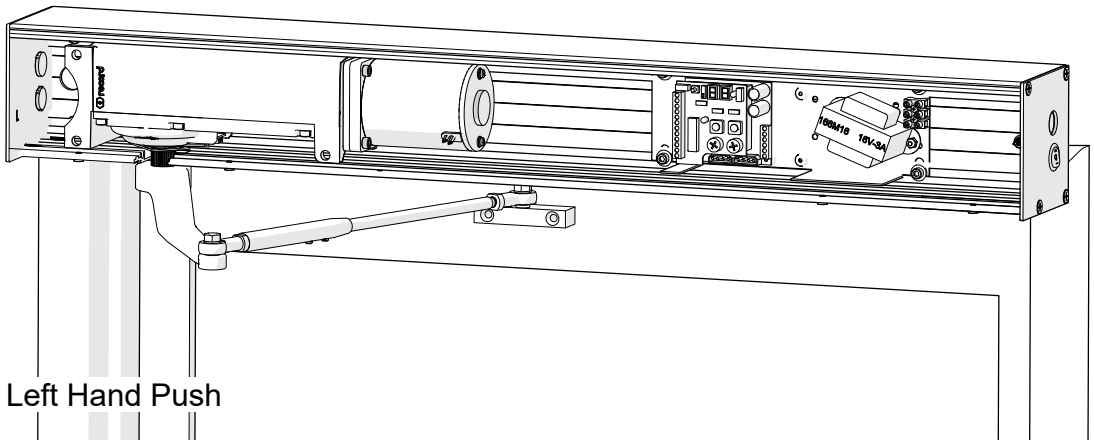

5.3.2 Left Hand Pull - Identification

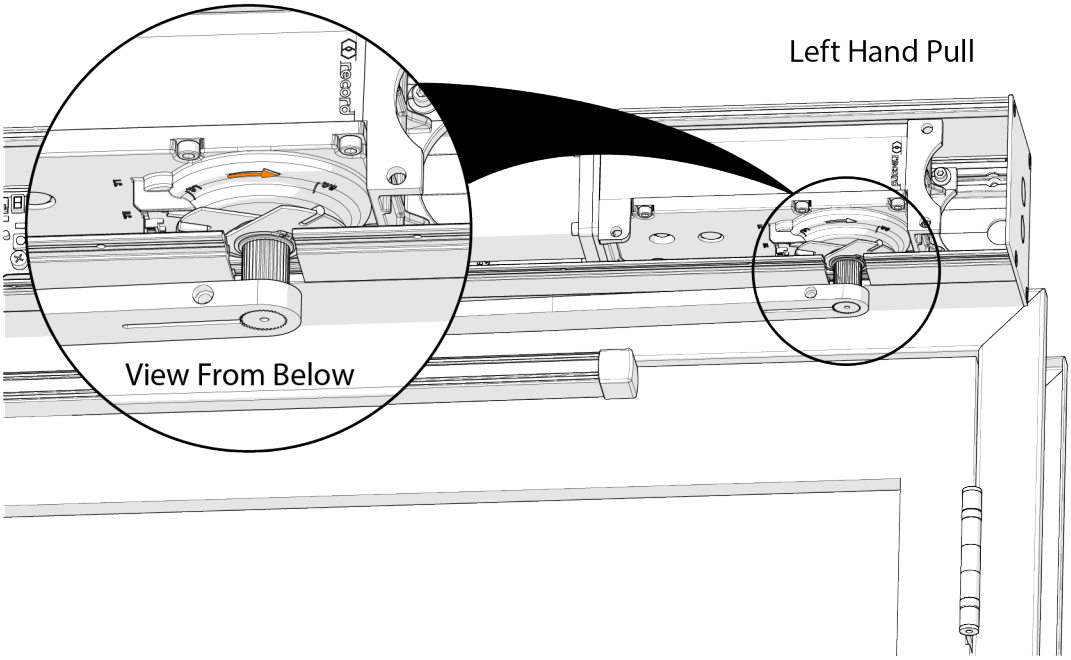

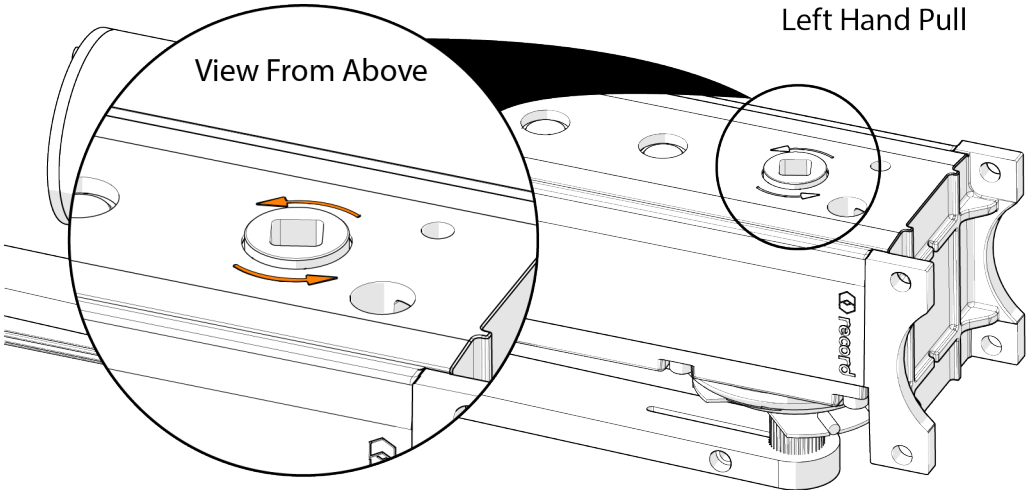

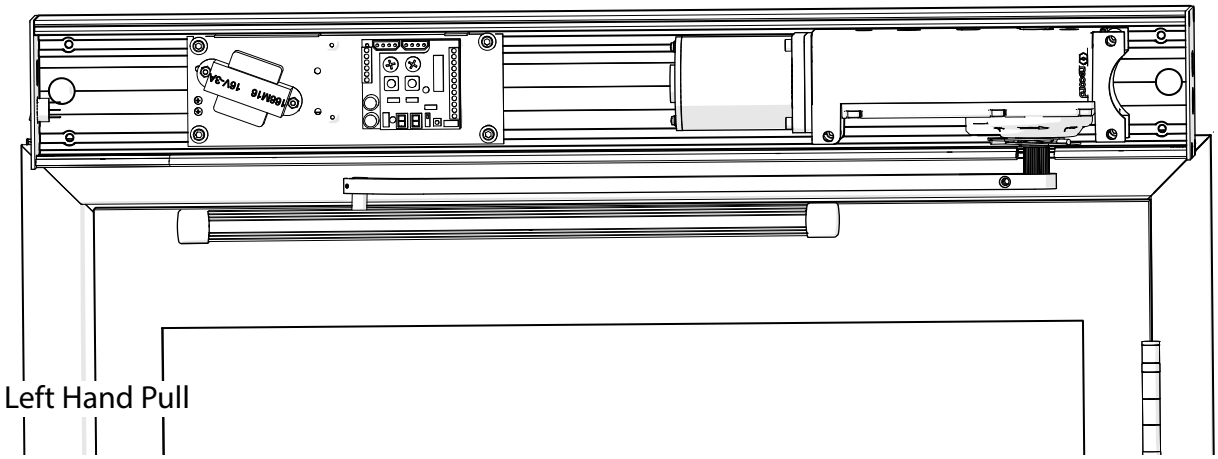

5.3.3 Right Hand Push - Identification

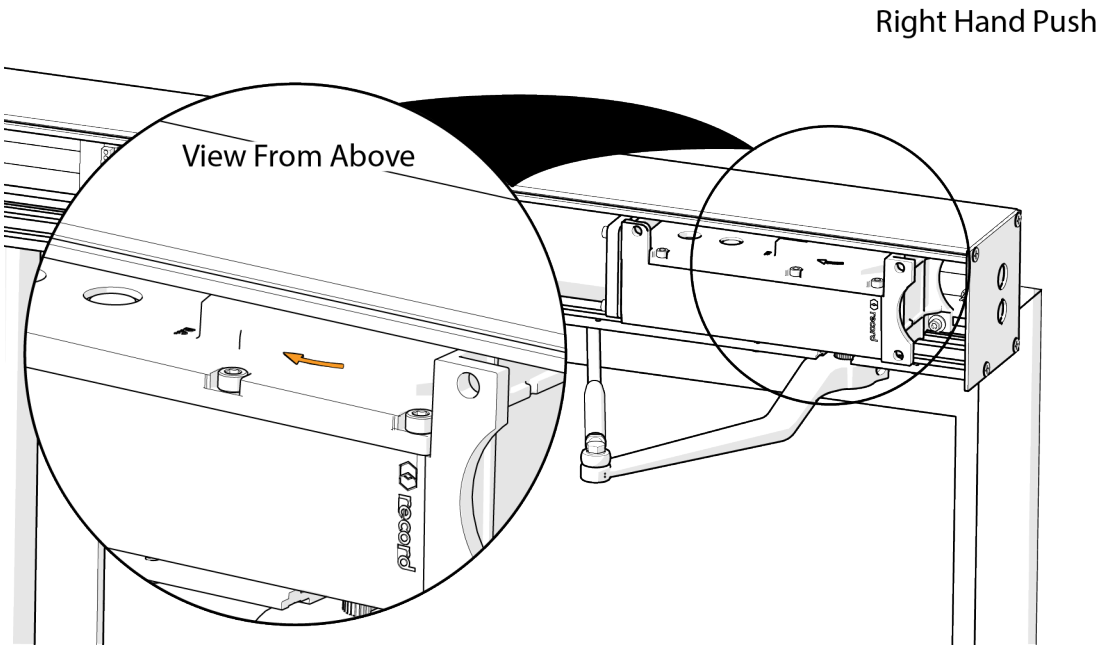

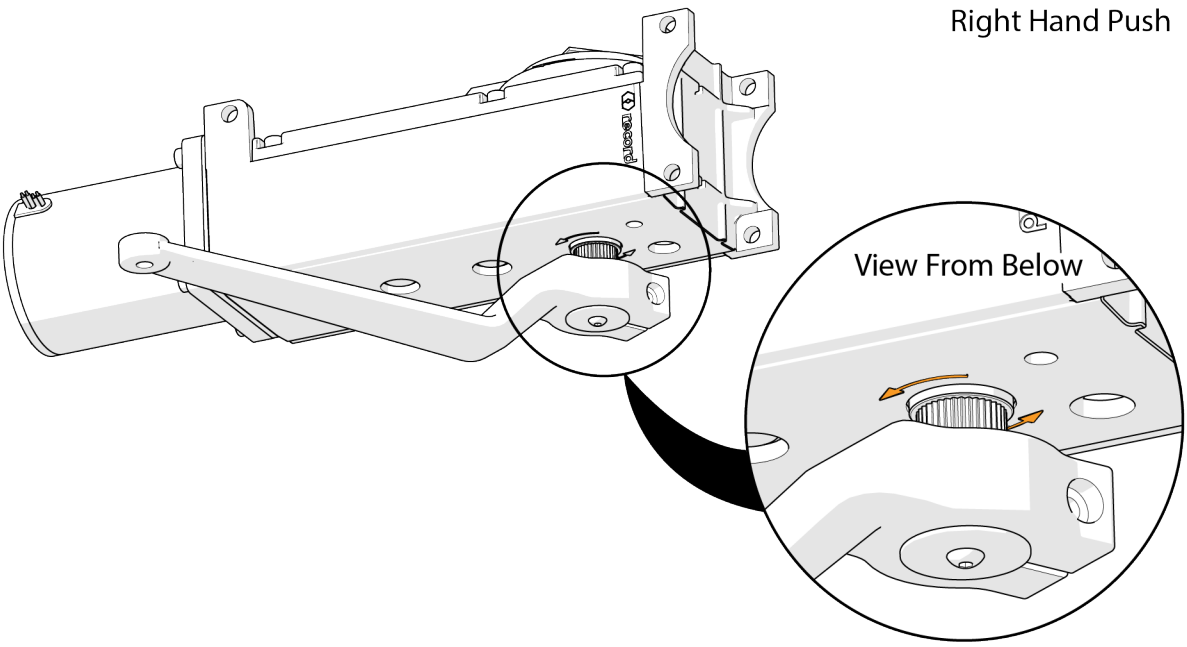

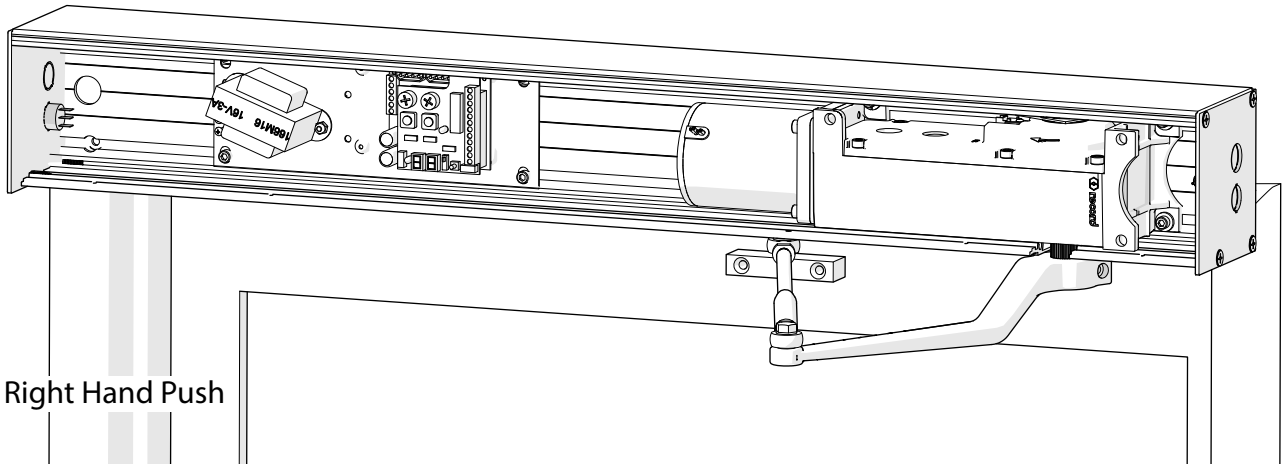

5.3.4 Right Hand Pull - Identification

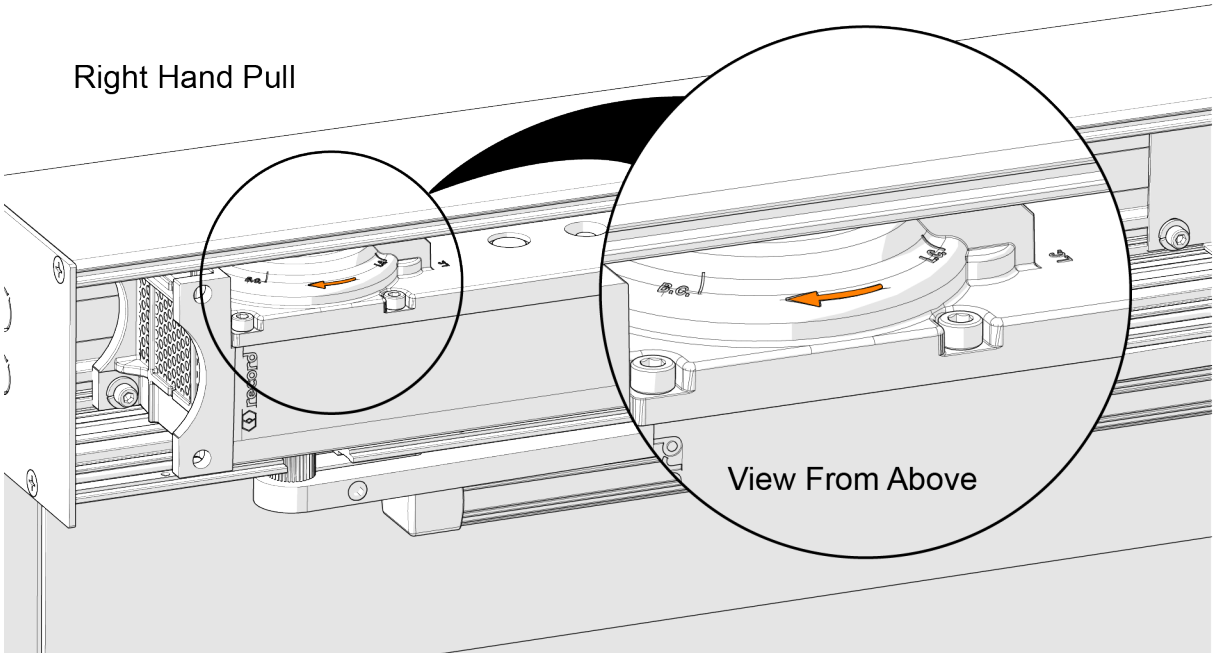

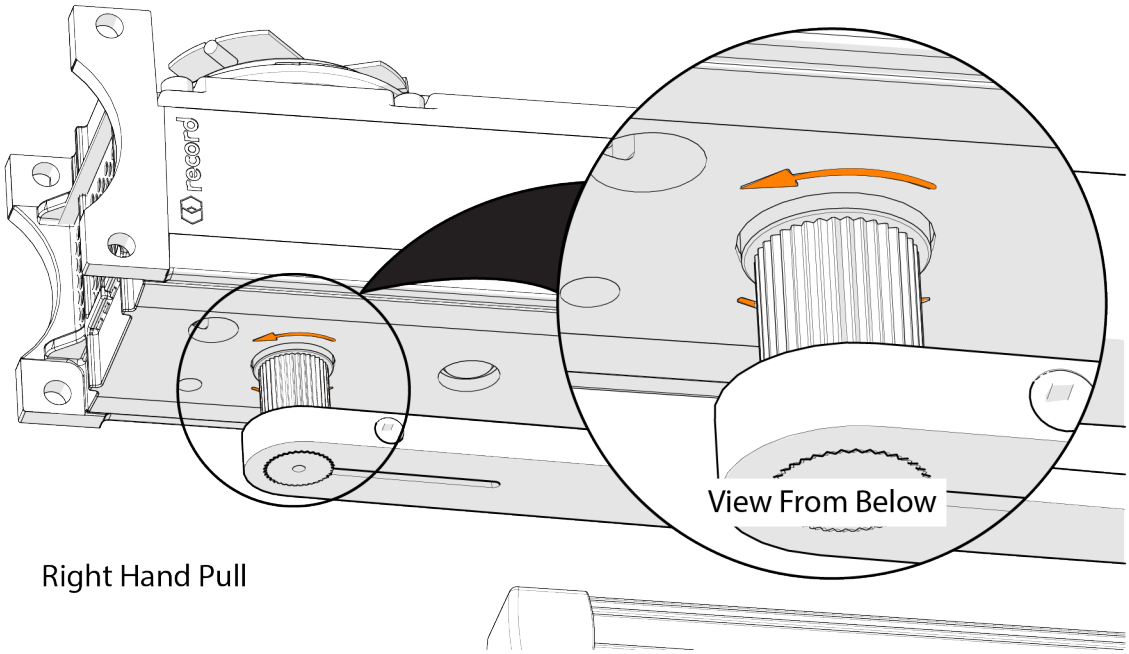

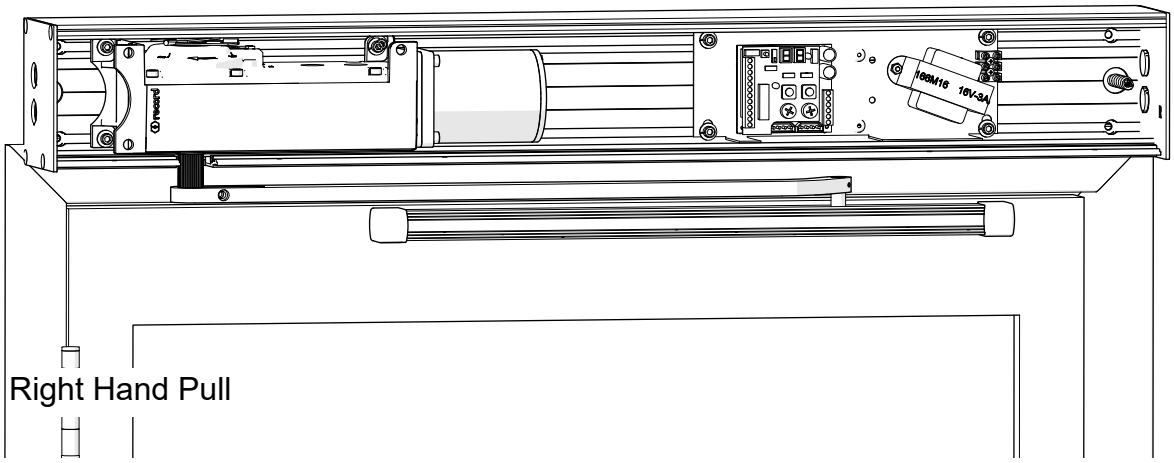

5.4 Header Installation

5.4.1 Mounting the Left Hand Push Header

The header assembly on push installations is mounted flush to the bottom of the door jamb header. If the door frame extends out away from the wall, then the gap between the back face of the header and the wall above the door frame will need to be filled with solid backing material.

Before fastening the operator header to the door frame, verify that the access holes for the high and low voltage wires will reach their connection points.

For push applications, the operator header will be mounted to the opposite side of where the hinges are installed on the door frame.

NOTICE

In typical installations, the operator header length equals the width of the door opening plus 3”(76mm).

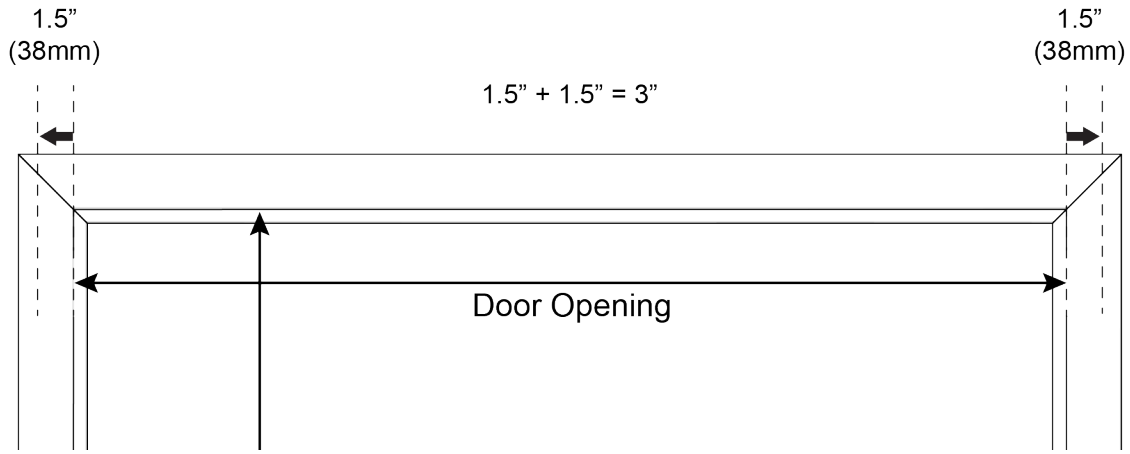

1. On the door frame header, measure 1.5” (38mm) from the door opening on the left side (where the hinges are installed) and place a mark.

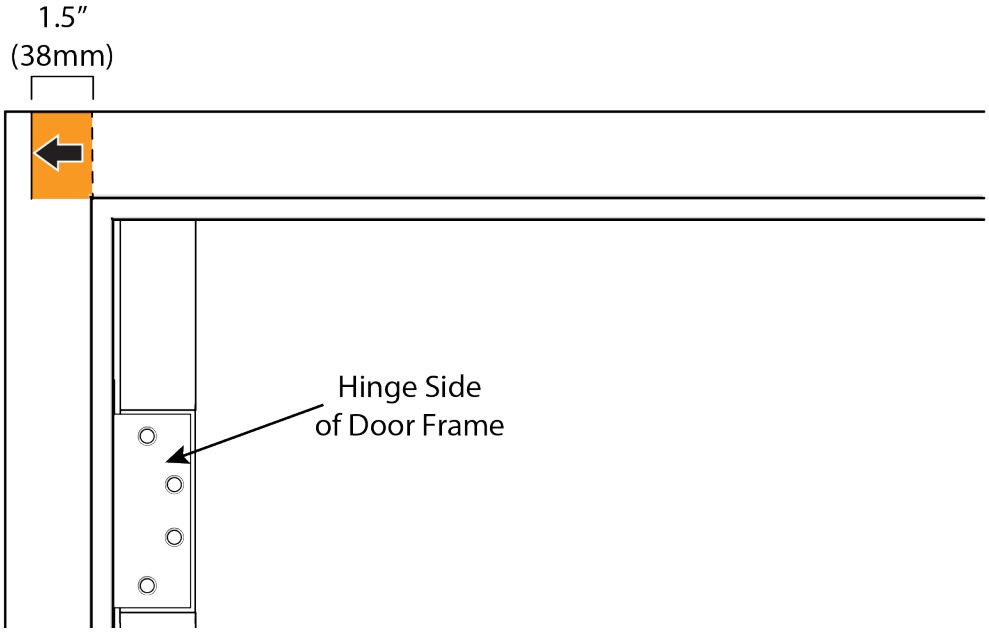

CAUTION

The header must be installed 1.5” from the hinge side regardless of whether the header is sized appropriately to the door opening.

2. Install the long filler plate on the right side of the header.

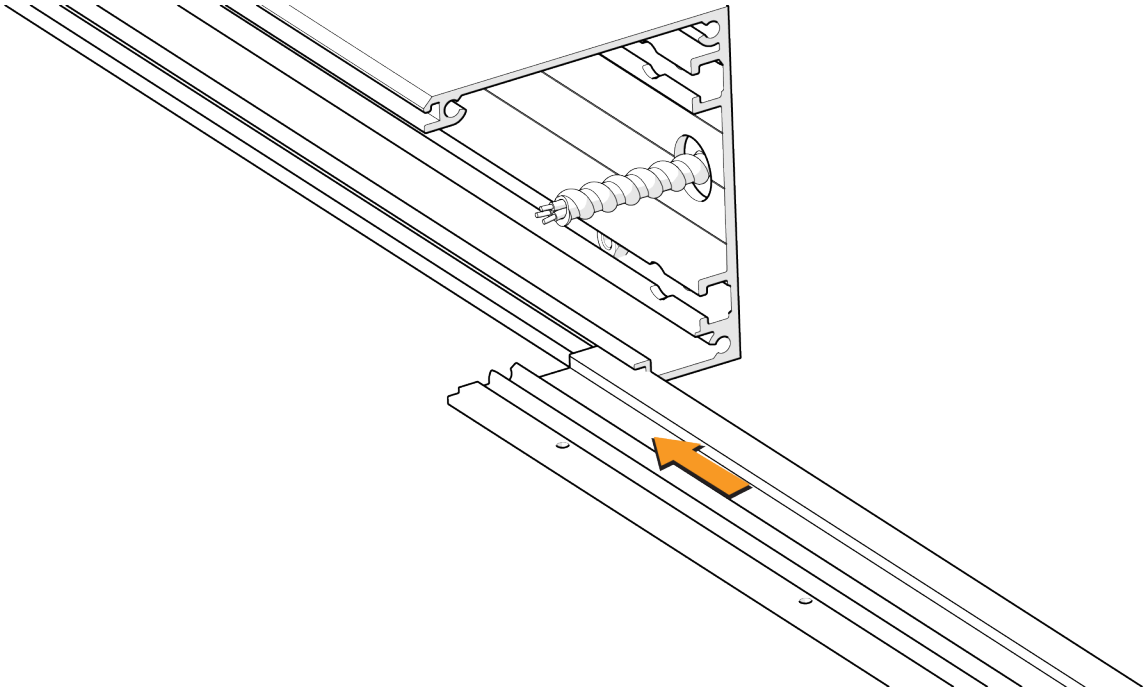

3. Install the short filler plate on the left side of the header.

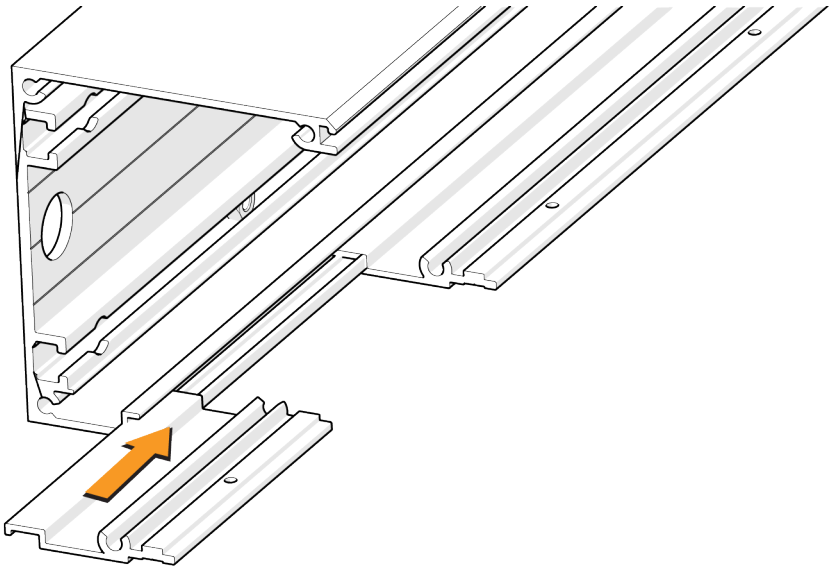

4. Align the header to the mark (1) that was previously made and ensure the bottom of the header is flush with the bottom of the upper door frame (2). Secure the header with a minimum of six (6) #14 x 1” Pan Quad Type A screws. Ensure the header is mounted level.

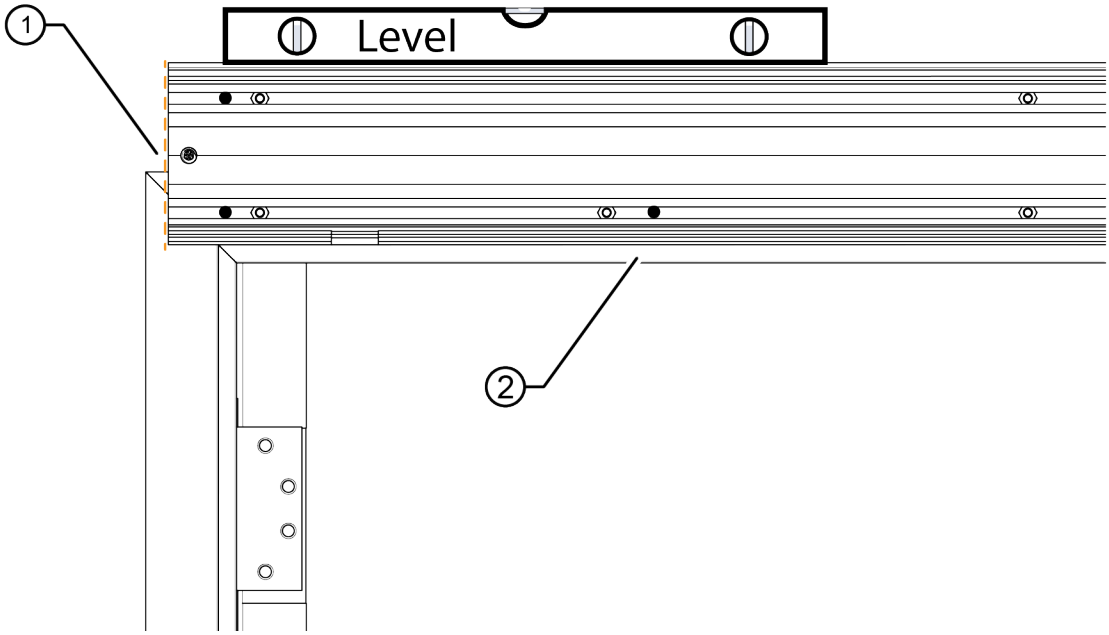

NOTICE

The locations of the screws will depend on mounting conditions and the application.

5. Verify that there are three (3) 5/16-18” hex nuts inserted in the rails of the header channels to install the operator.

NOTICE

There will be one (1) nut in the upper channel and two (2) nuts in the lower channel.

6. Assemble the operator spindle as shown below.

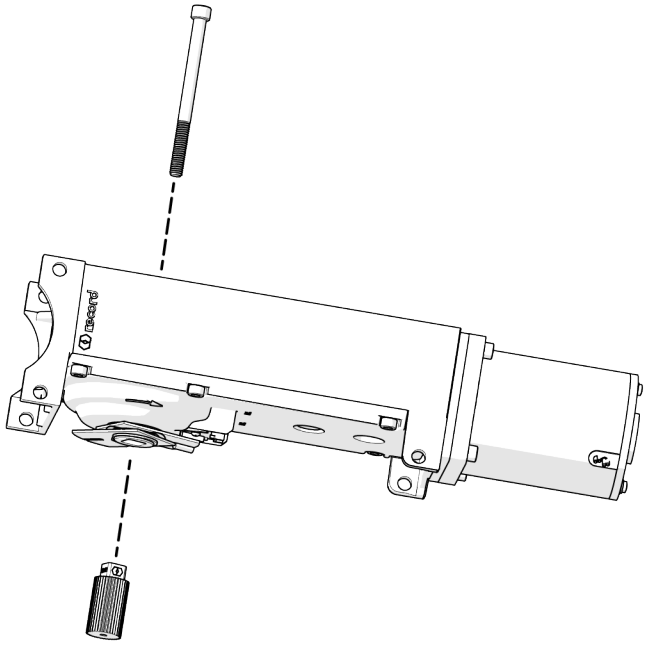

7. Tighten the spindle bolt (5/16”-18 x 4”) using an Allen wrench.

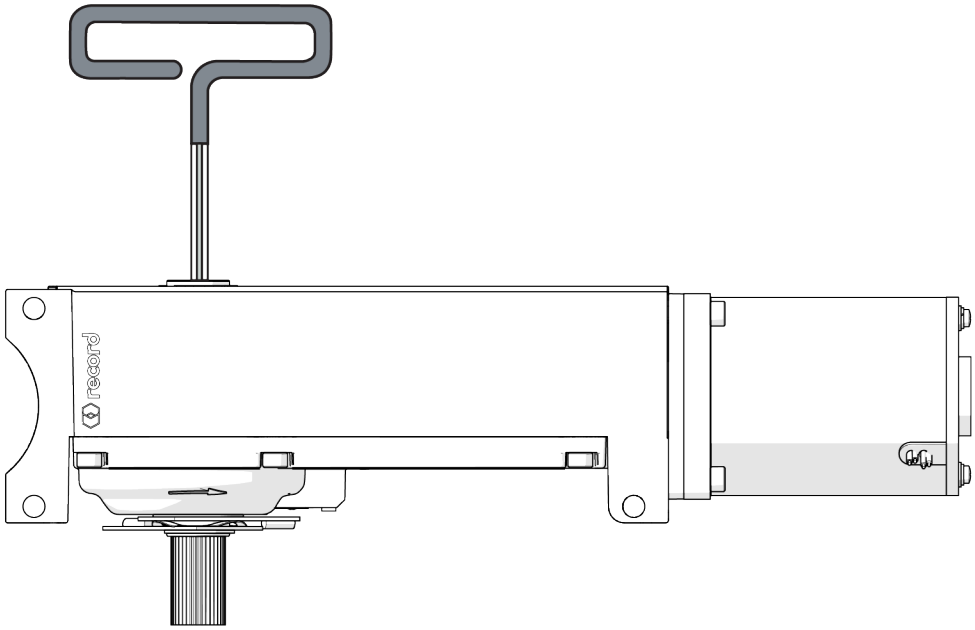

8. Using the three (3) 5/16’-18 x 3/4” bolts, mount the operator to the header panel. Do not fully tighten the screws.

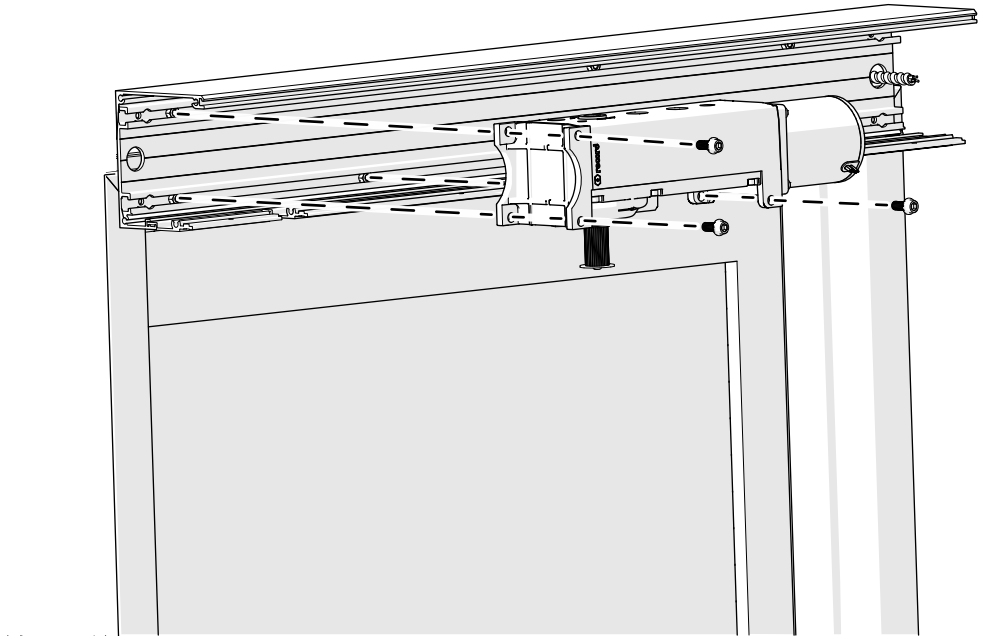

9. Install the end cap using the original four (4) screws (1/4”-20 x 3/4”).

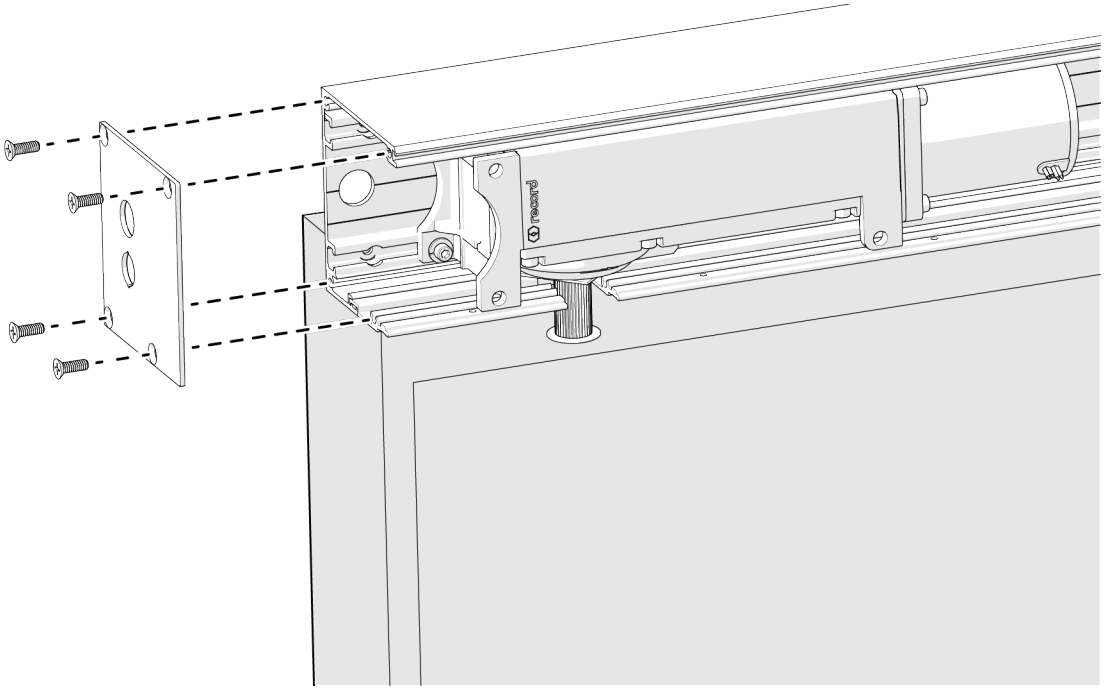

10. Position the operator until its mounting tab is 2 1/16” (52mm) from the inside of the end cap and then tighten the three bolts to secure the operator to the header.

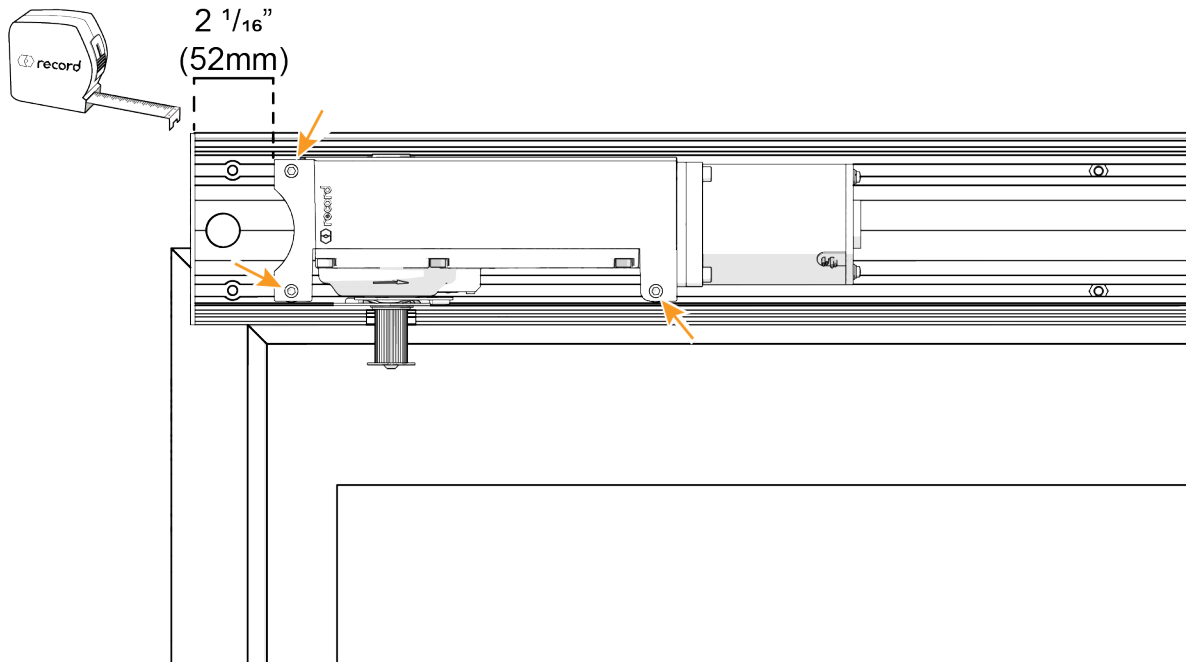

11. Verify that the four (4) control unit mounting nuts are positioned properly in the header.

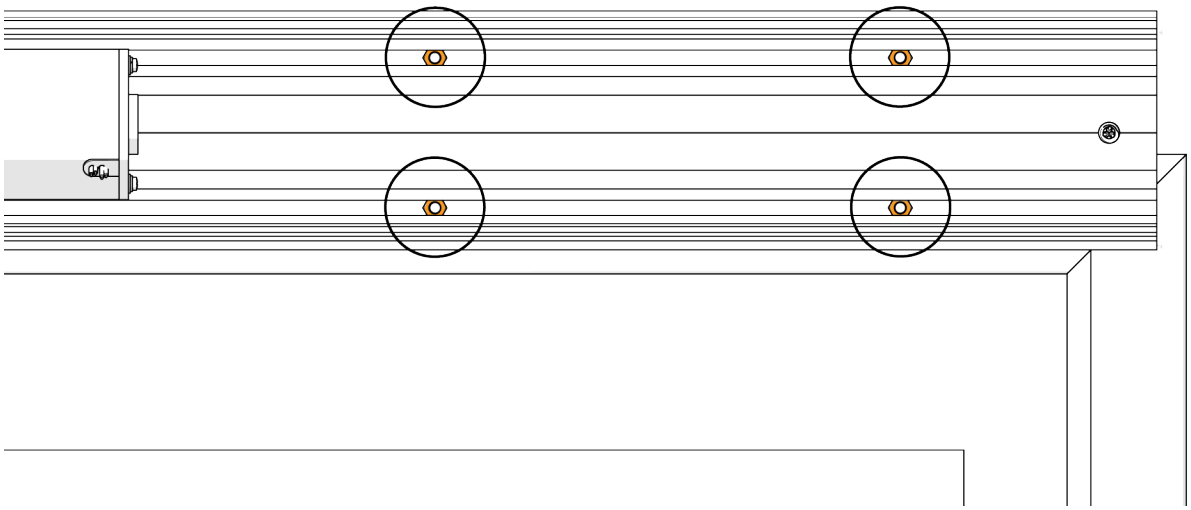

12. Carefully mount the control unit to the header using the original four (4) 5/16”-18 x 1/2” bolts and then securely tighten the bolts.

CAUTION

To reduce the possibility of electrostatic damage to the circuit board, avoid touching it with bare hands unless you are properly grounded for ESD.

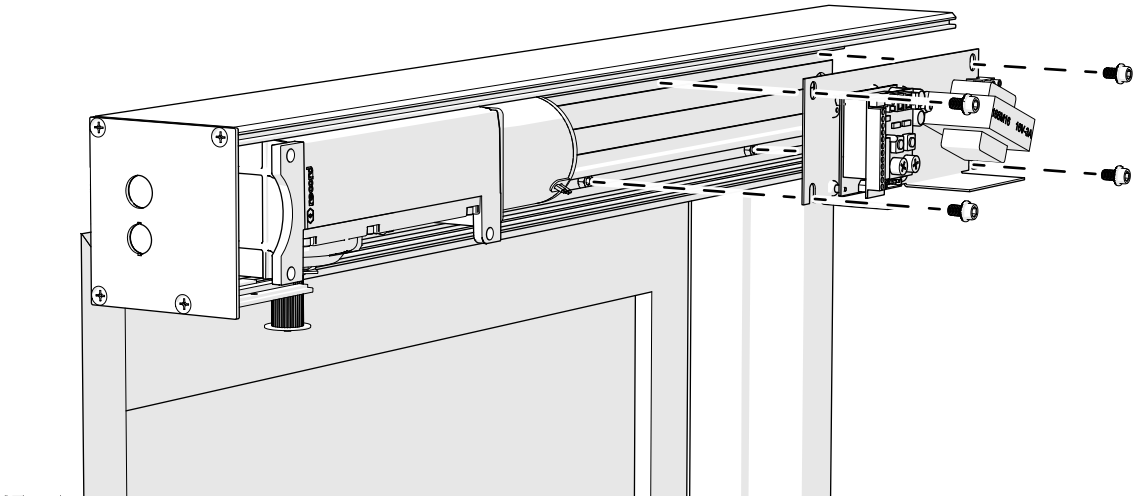

13. If your configuration includes the optional power supply, verify that the power supply mounting nut is positioned properly in the header channel.

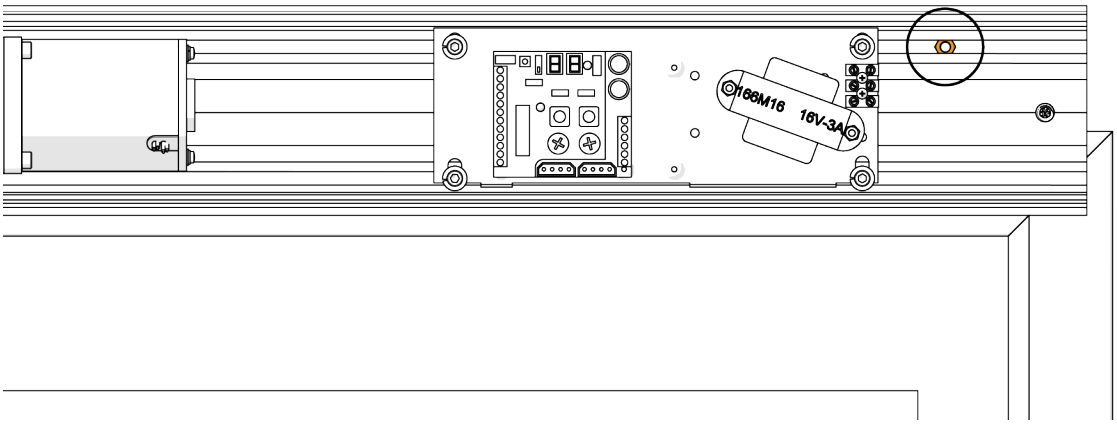

14. Carefully mount the power supply to the header using the original spacer, washer, and bolt.

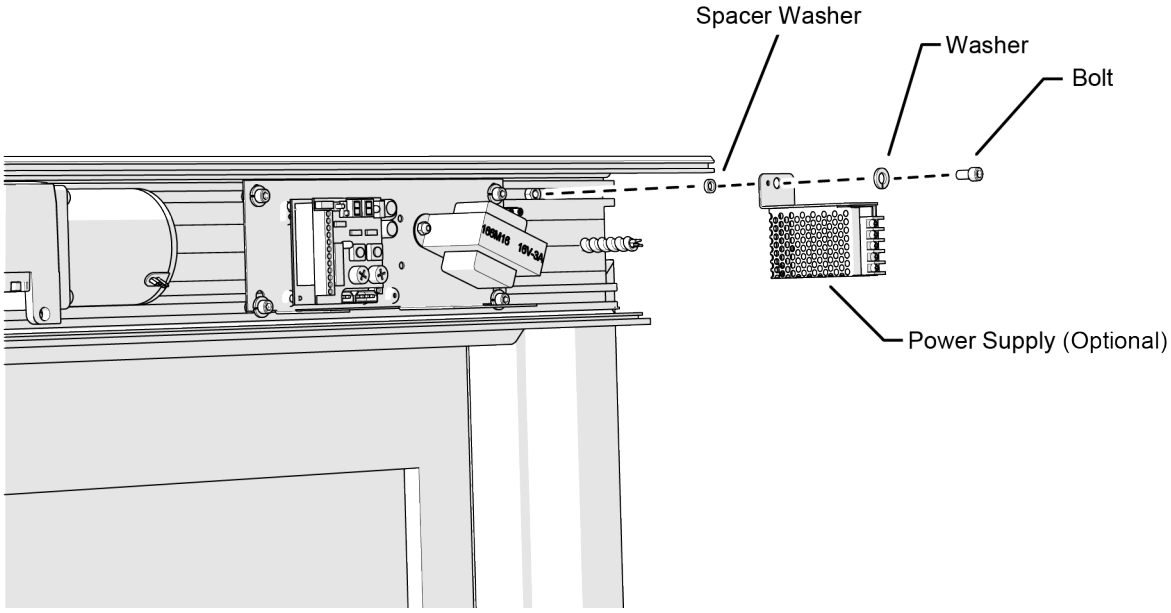

15. Install the end cap using the original four (4) screws (1/4”-20 x 3 x 3/4”).

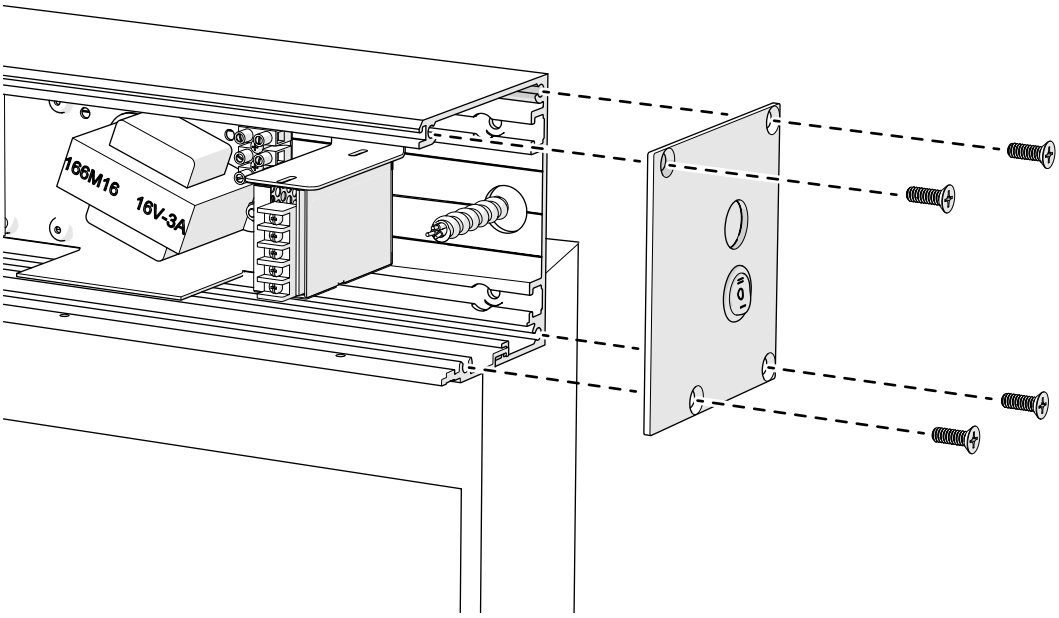

5.4.2 Mounting the Right Hand Push Header

The header assembly on push installations is mounted flush to the bottom of the door jamb header. If the door frame extends out away from the wall, then the gap between the back face of the header and the wall above the door frame will need to be filled with solid backing material.

Before fastening the operator header to the door frame, verify that the access holes for the high and low voltage wires will reach their connection point.

For push applications, the operator header will be mounted to the opposite side of where the hinges are installed on the door frame.

NOTICE

In typical installations, the operator header length equals the width of the door opening plus 3”.

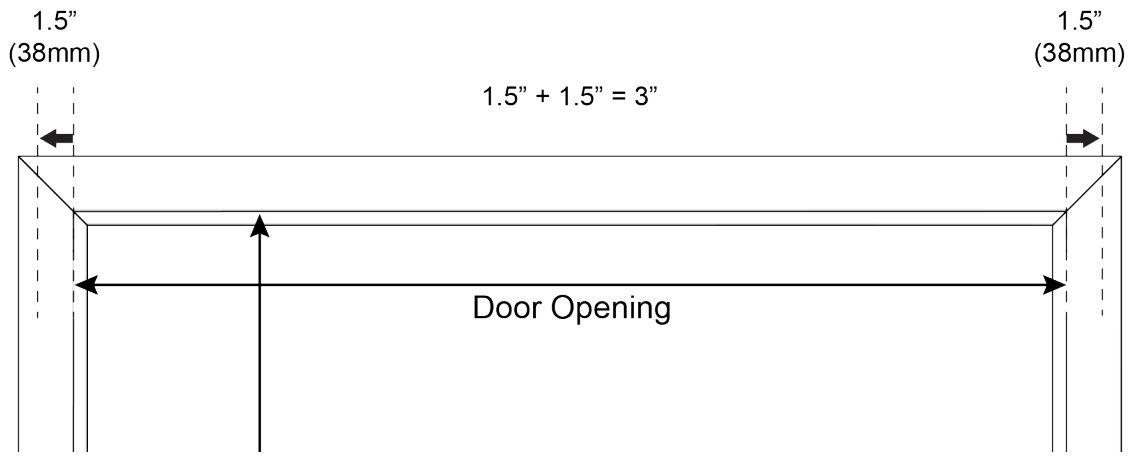

1. On the door frame header, measure 1.5” (38mm) from the door opening on the right side (where the hinges are installed) and place a mark.

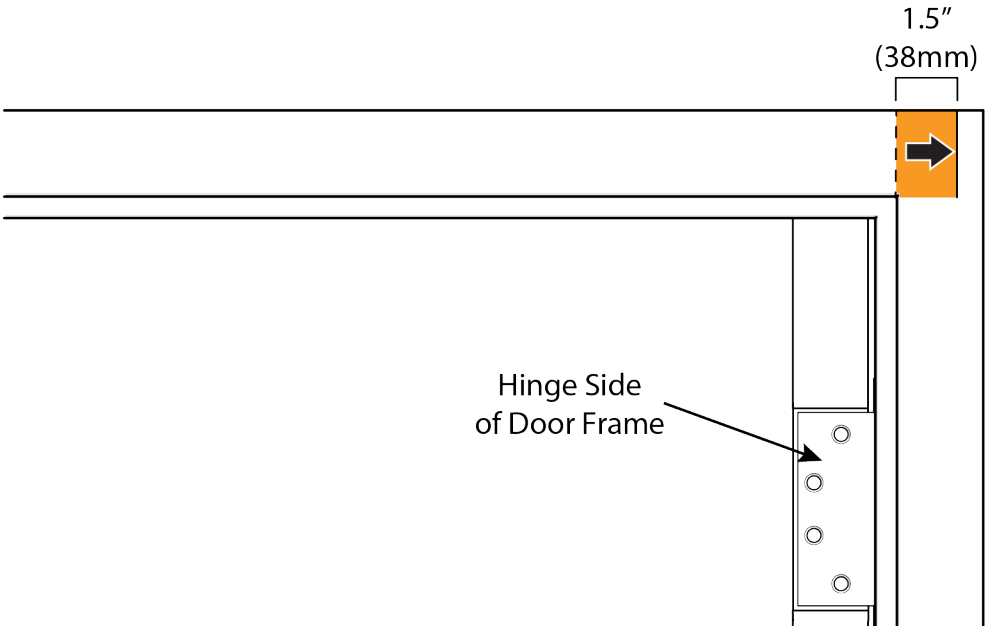

CAUTION

The header must be installed 1.5” from the hinge side regardless of whether the header is sized appropriately to the door opening.

2. Install the long filler plate on the left side of the header.

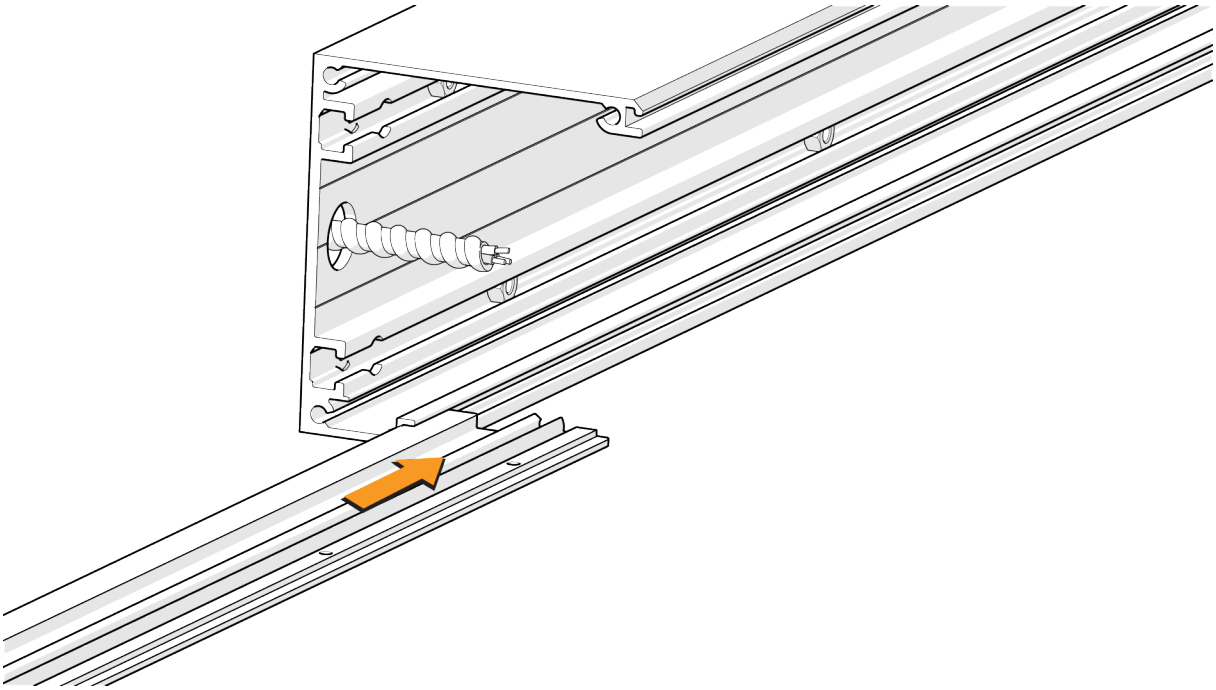

3. Install the short filler plate on the right side of the header.

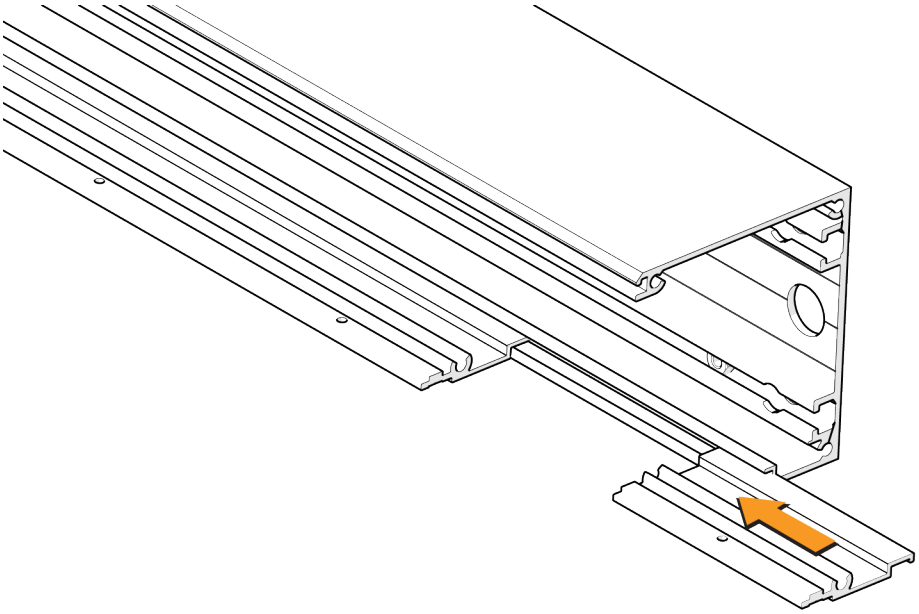

4. Align the header to the mark (1) that was previously made and ensure the bottom of the header is flush with the bottom of the upper door frame (2). Secure the header with a minimum of six (6) #14 x 1” Pan Quad Type A screws. Ensure the header is mounted level.

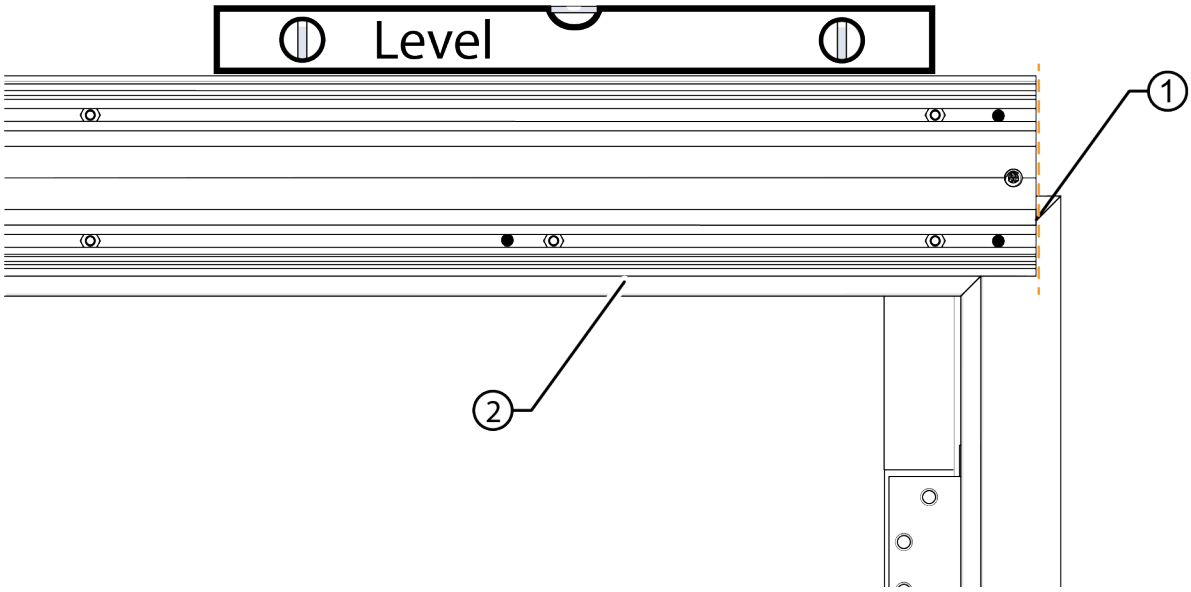

NOTICE

The locations of the screws will depend on mounting conditions and the application.

5. Verify there are three (3) 5/16-18” hex nuts inserted in the slots on the header back panel.

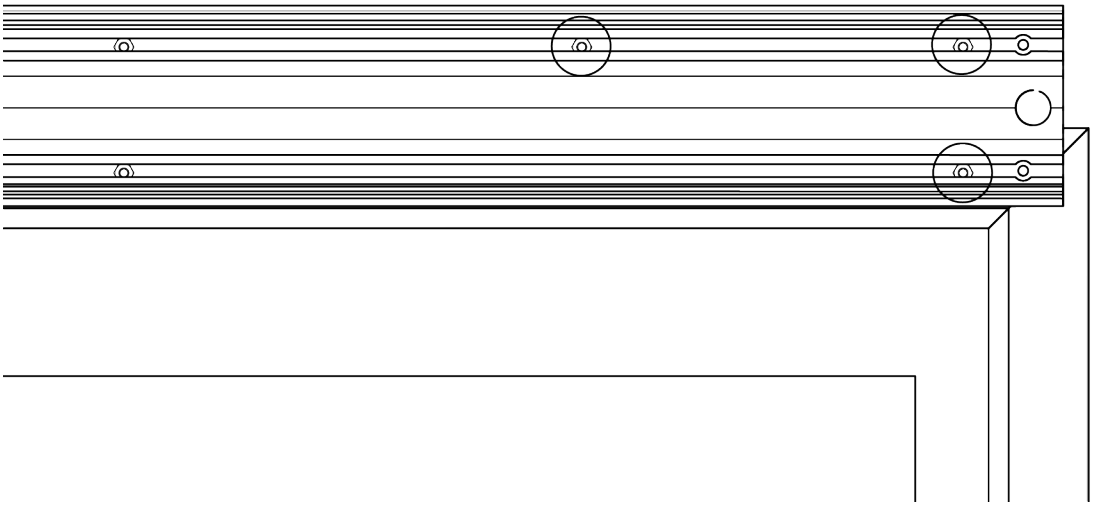

6. Assemble the operator spindle as shown below.

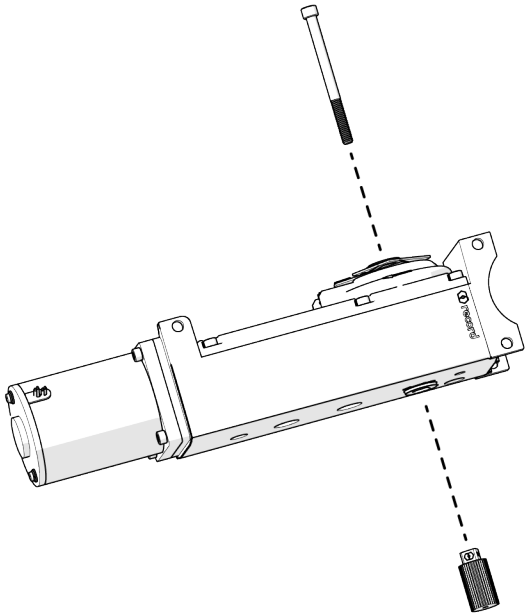

7. Tighten the spindle bolt (5/16”-18 x 4”) using an Allen wrench.

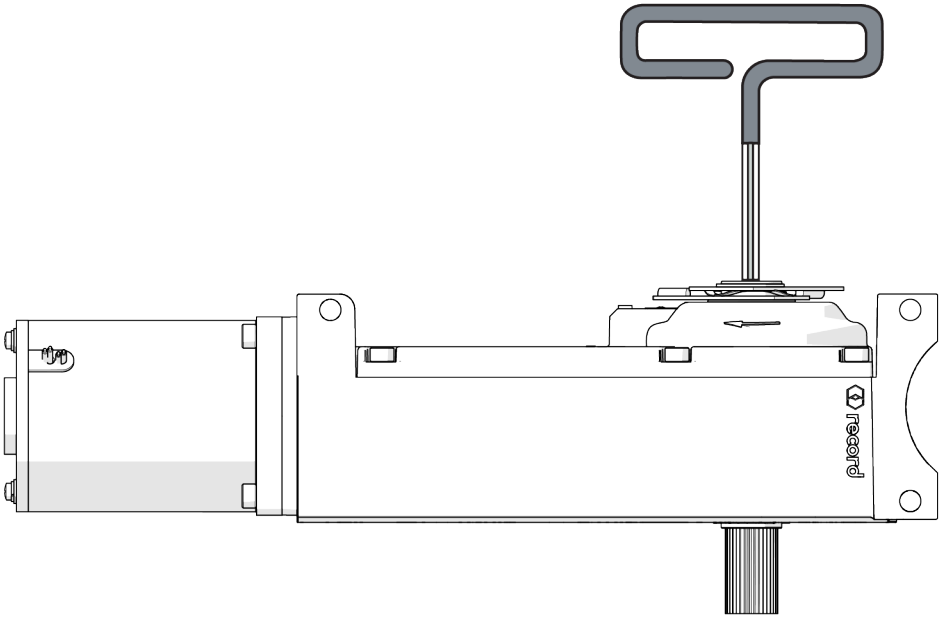

8. Using the original three (3) bolts, mount the operator to the header panel. Do not fully tighten the screws.

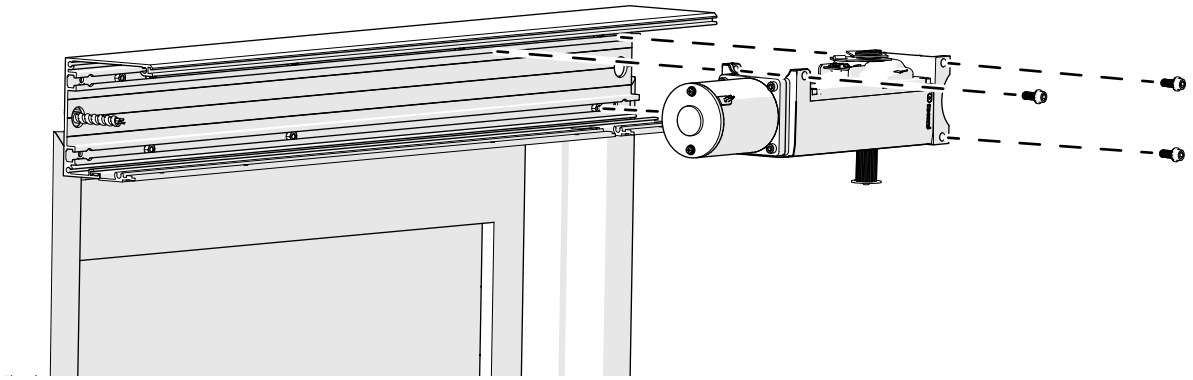

9. Reinstall the right side end cap using the original four (4) screws (1/4”-20 x 3 x 3/4”).

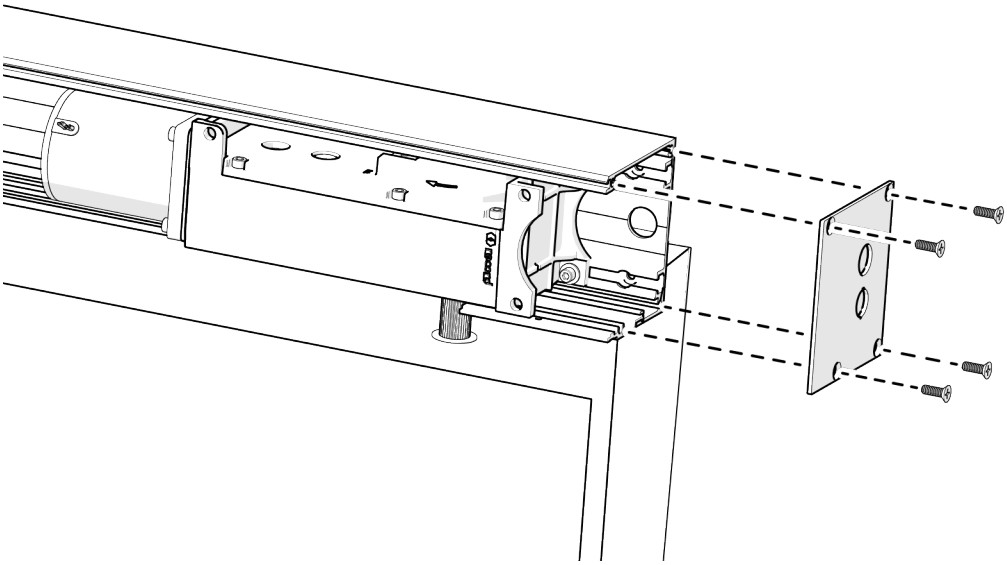

10. Position the operator until its mounting tab is 2 1/16” (52mm) from the inside of the end cap and then tighten the three bolts to secure the operator to the header.

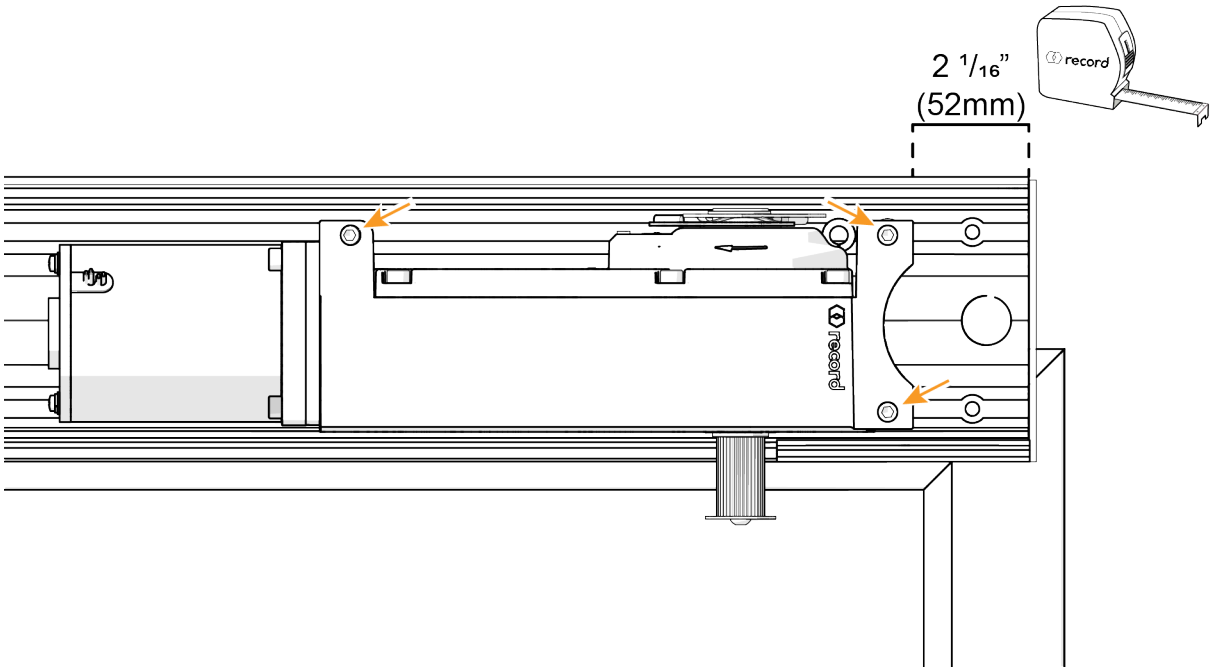

11. Verify that the four (4) control unit mounting nuts are positioned properly in the header channel.

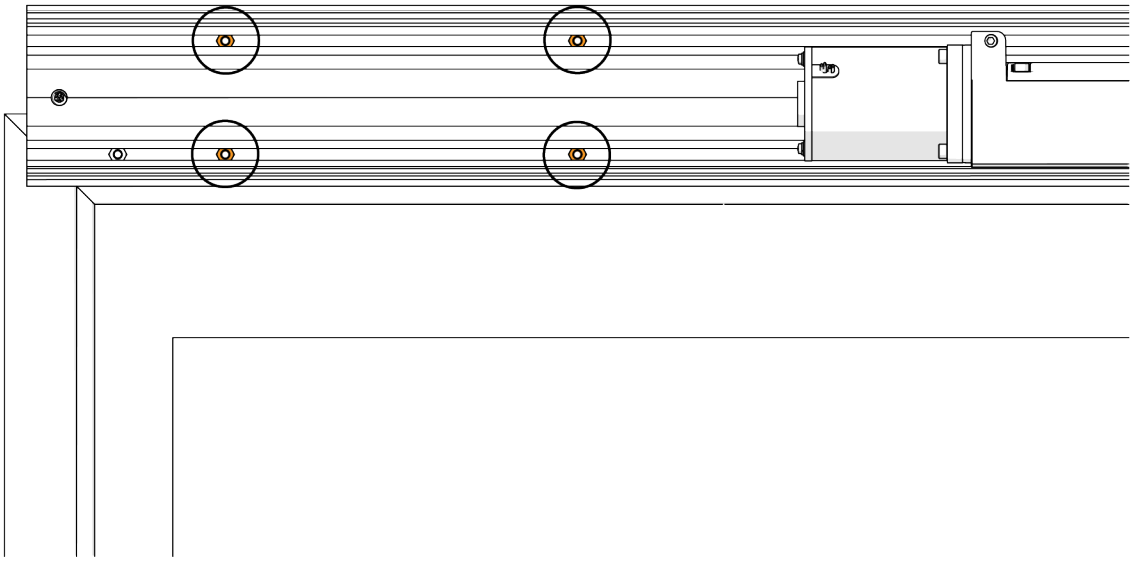

12. Carefully mount the control unit to the header channel using the original four (4) bolts and then securely tighten the bolts.

CAUTION

To reduce the possibility of electrostatic damage to the circuit board, avoid touching it with bare hands unless you are properly grounded for ESD.

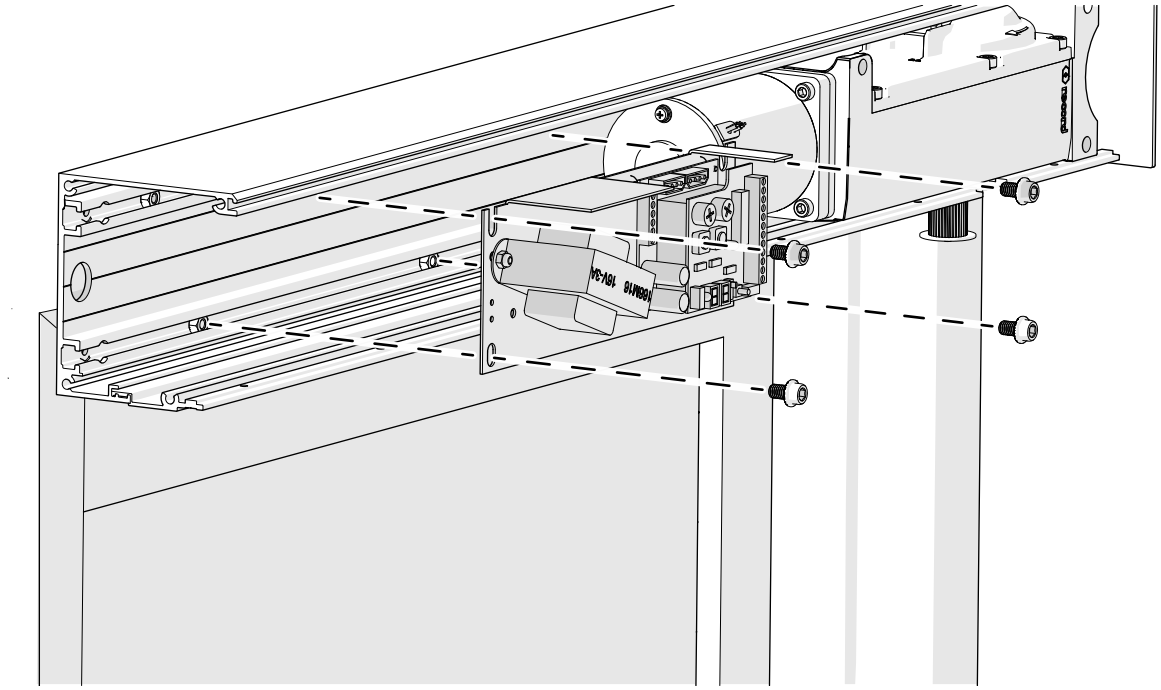

13. If your configuration includes the optional power supply, verify that the power supply mounting nut is positioned properly in the header channel.

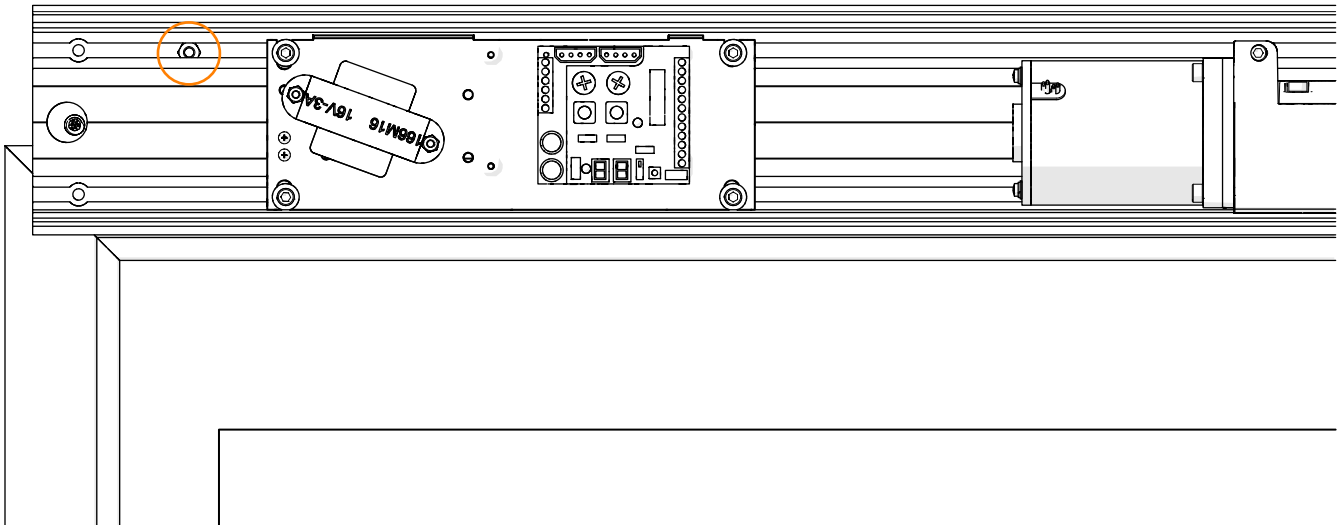

14. Carefully mount the power supply to the header using the original spacer, washer and bolt.

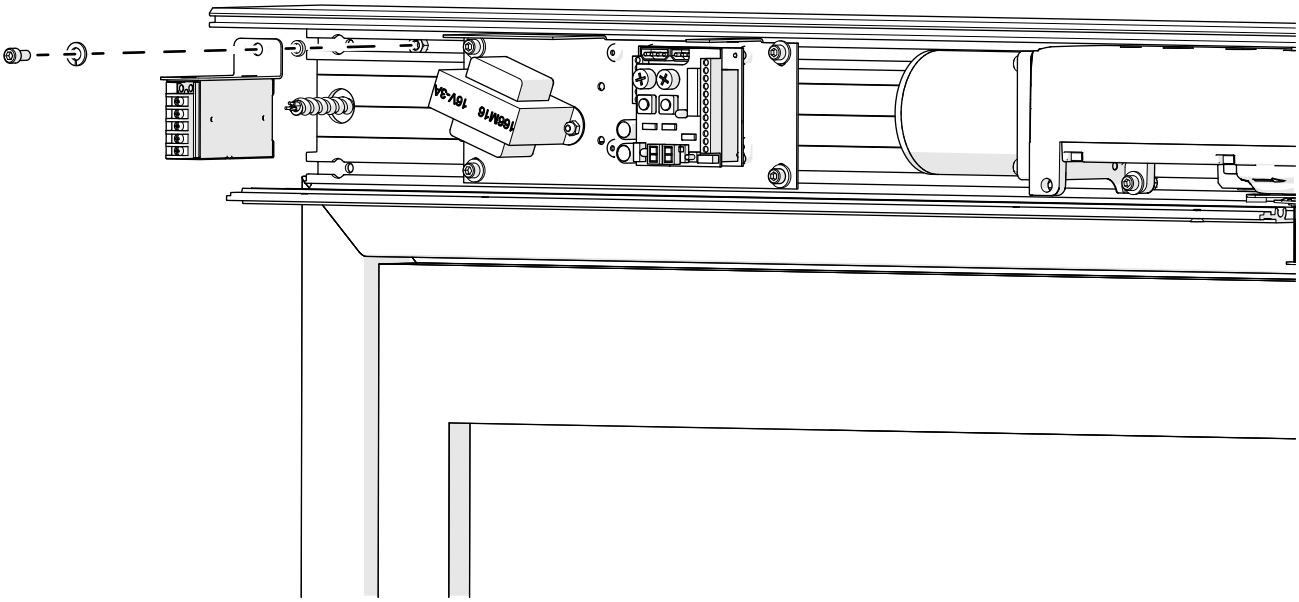

15. Install the end cap using the original four (4) screws (1/4”-20 x 3 x 3/4”).

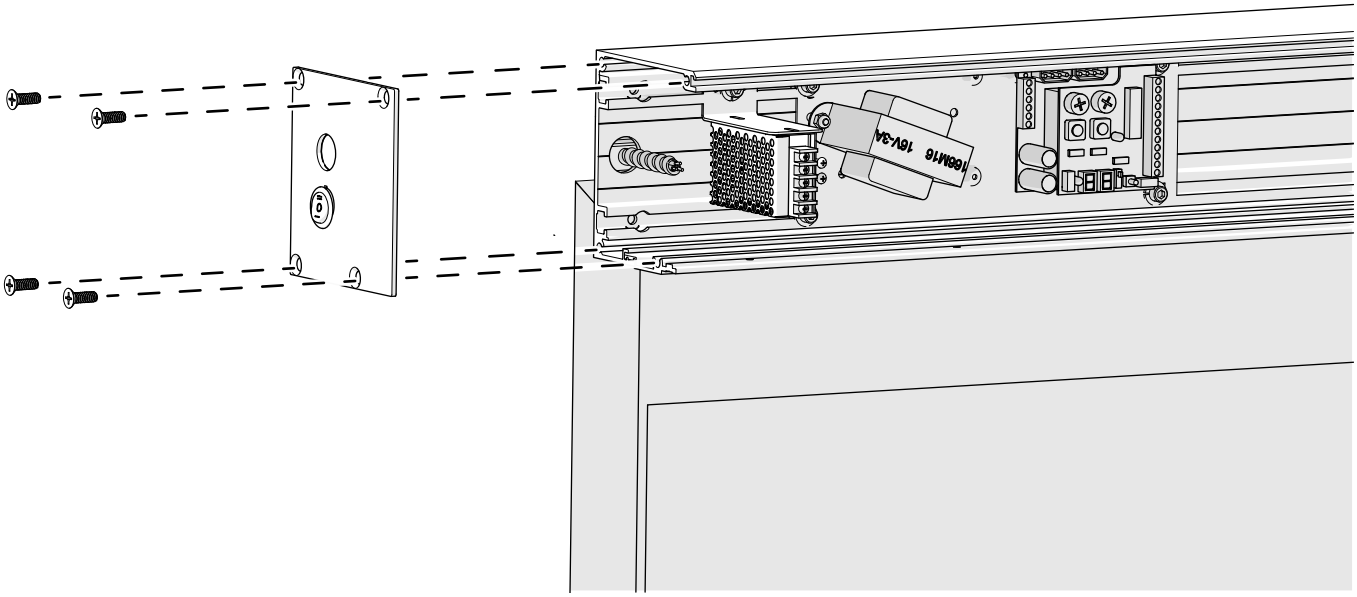

5.4.3 Mounting the Right Hand Pull Header

The bottom of the header assembly on pull installations is mounted 1 3/8” (34mm) from the bottom of the door jamb header. If the door frame extends out away from the wall, then the gap between the back face of the header and the wall above the door frame will need to be filled with solid backing material.

Before fastening the operator header to the door frame, verify that the access holes for the high and low voltage wires will reach their connection point.

For pull applications, the operator header will be mounted to the same side of where the hinges are installed on the door frame.

NOTICE

In typical installations, the operator header length equals the width of the door opening plus 3”.

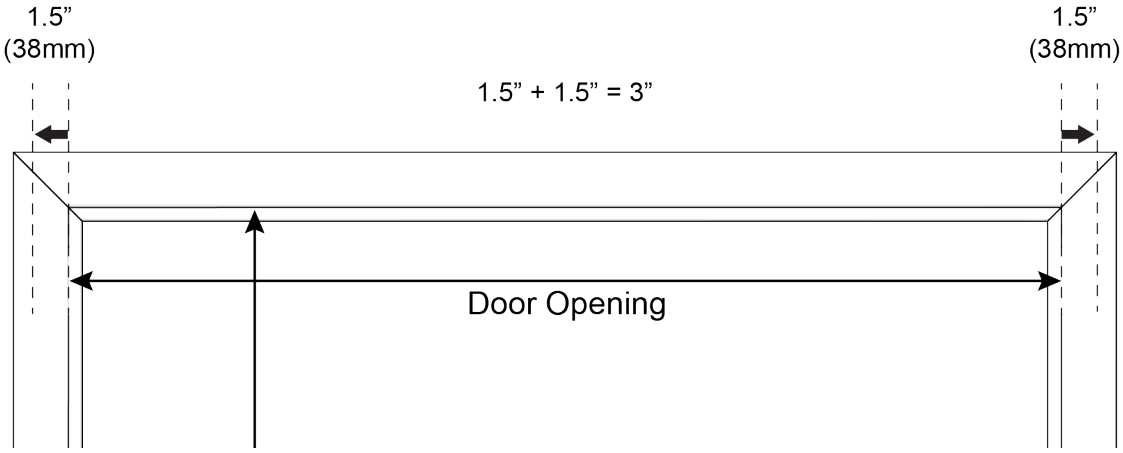

1. On the door frame header, measure 1.5” (38mm) from the door opening on the left side (where the hinges are installed) and place a mark.

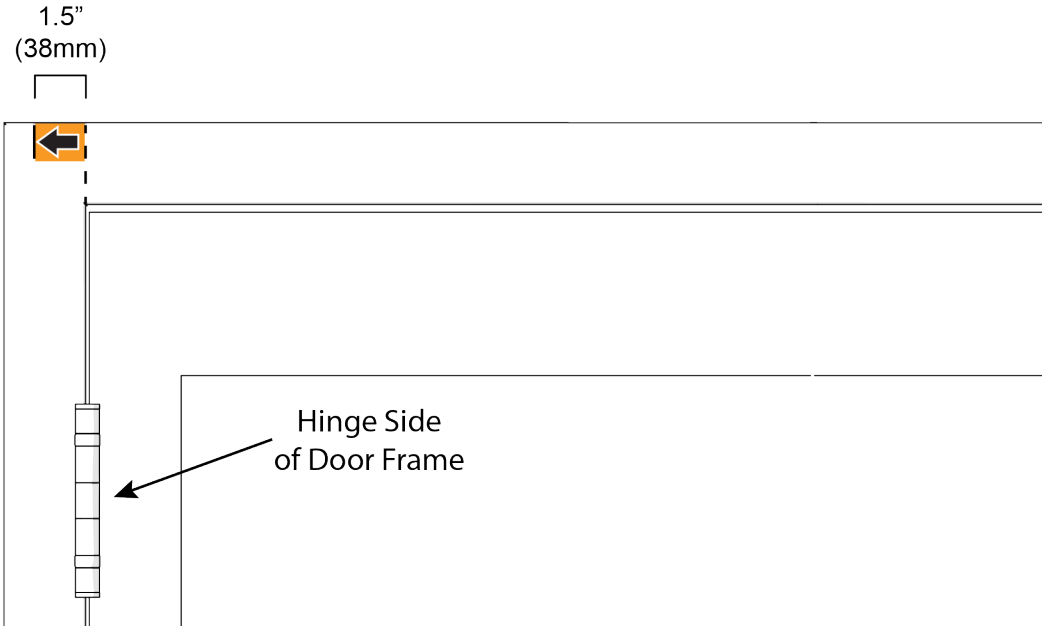

CAUTION

The header must be installed 1.5” from the hinge side regardless of whether the header is sized appropriately to the door opening.

2. On the door frame header, measure up 1 3/8” (34mm) from the door opening and place a mark. This measurement should be consistent from left-to-right.

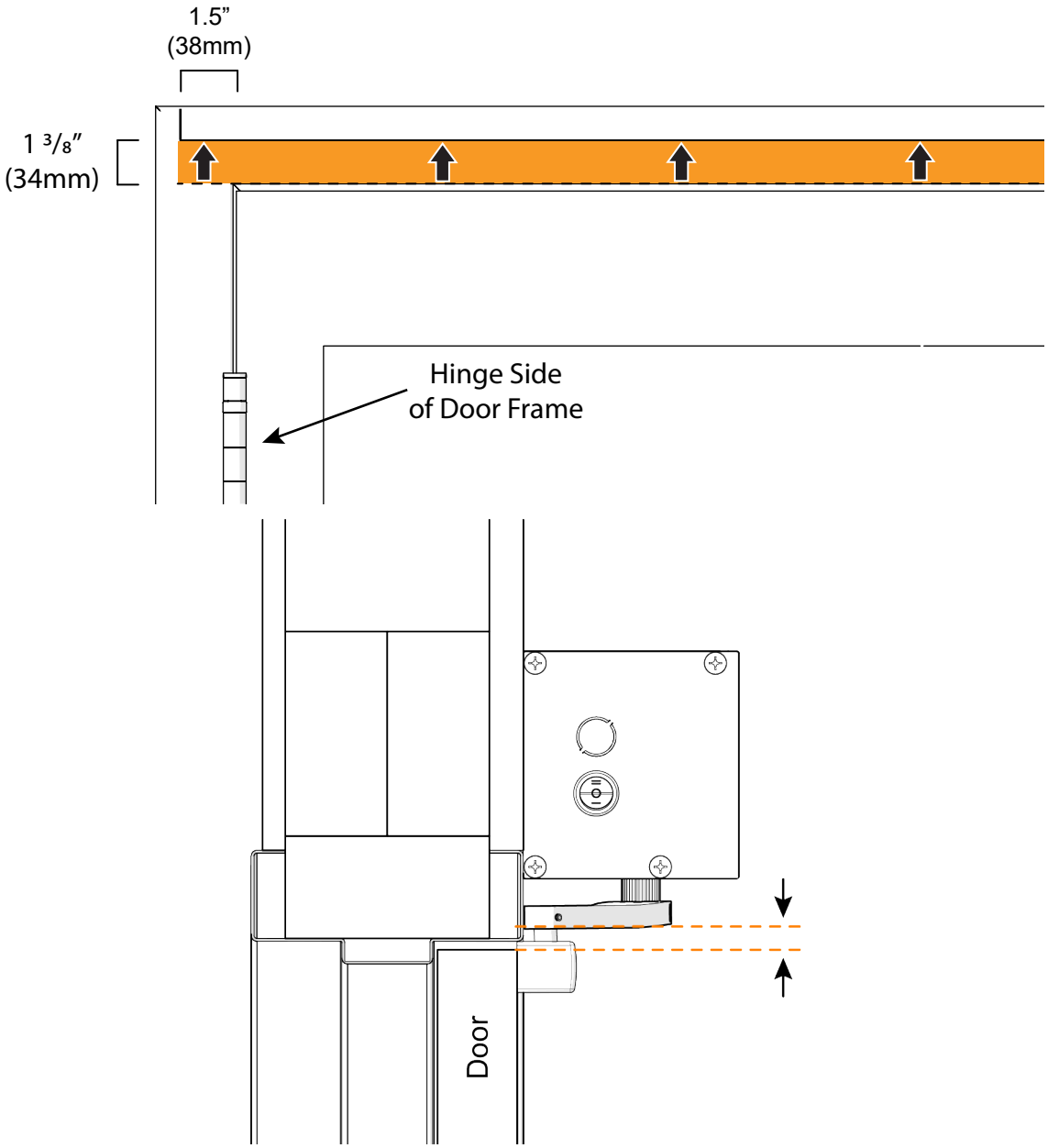

NOTICE

The header should be mounted so that the spindle and arm do not obstruct the swing path of the door.

3. Install the long filler plate on the right side of the header.

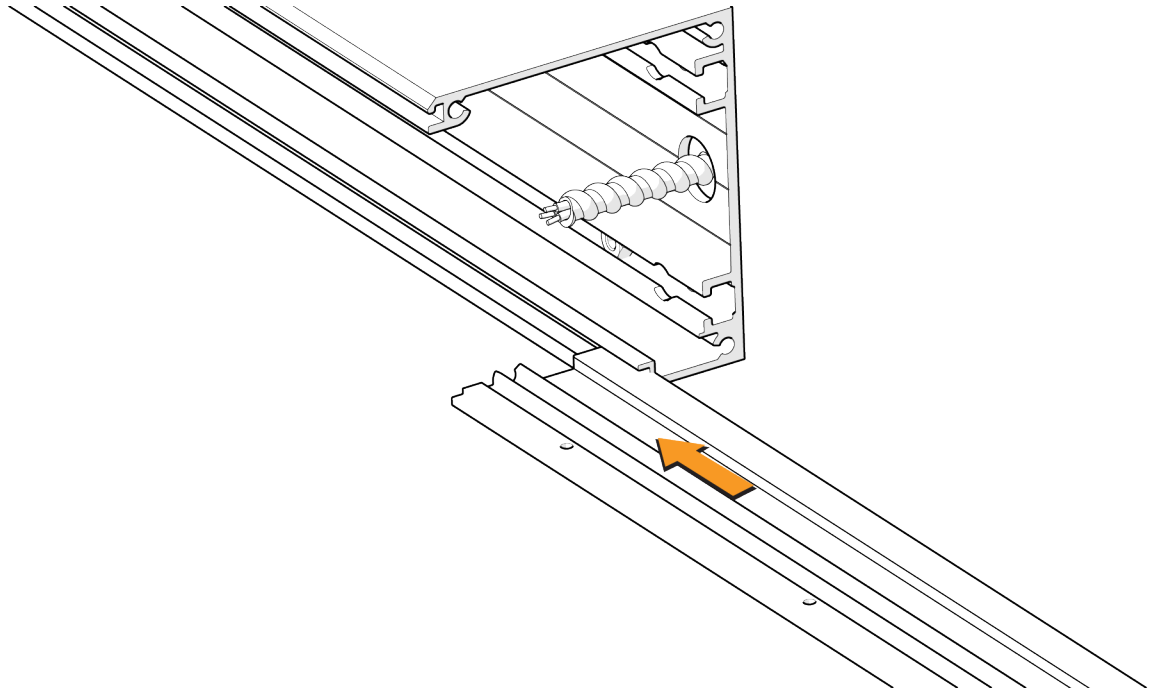

4. Install the short filler plate on the left side of the header.

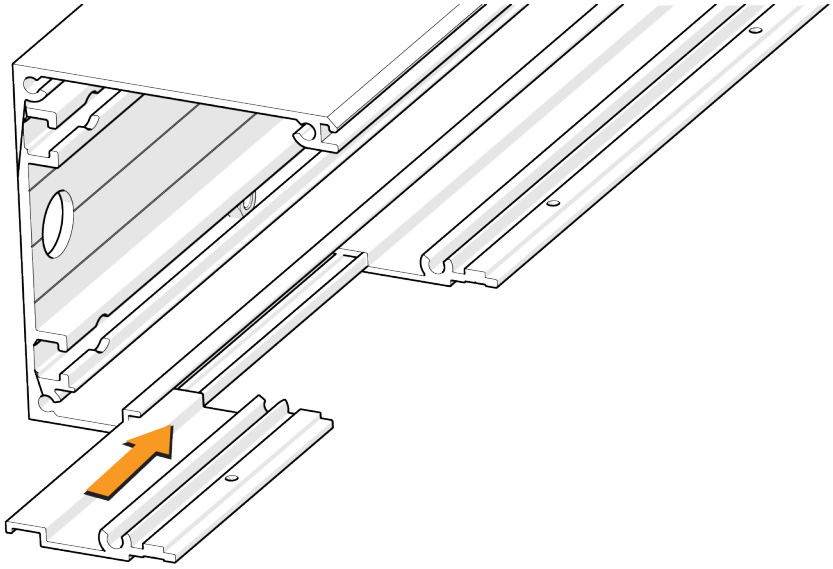

5. Align the header to the marks (1 & 2) that were previously made. Secure the header with a minimum of six (6) #14 x 1” Pan Quad Type A screws. Ensure the header is level.

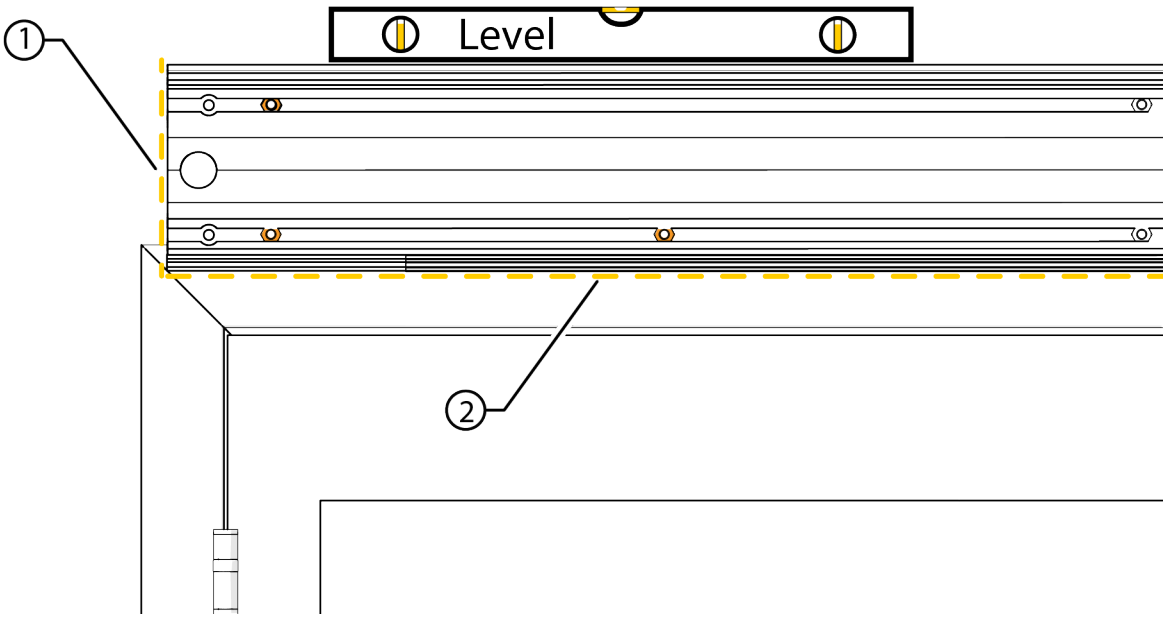

NOTICE

If possible, attach the header to the door frame with multiple fasteners. If this is not possible, then ensure that the header is secured in multiple locations to structural components in the wall so that the load is balanced.

6. Verify there are three (3) 5/16-18” hex nuts inserted in the header channels.

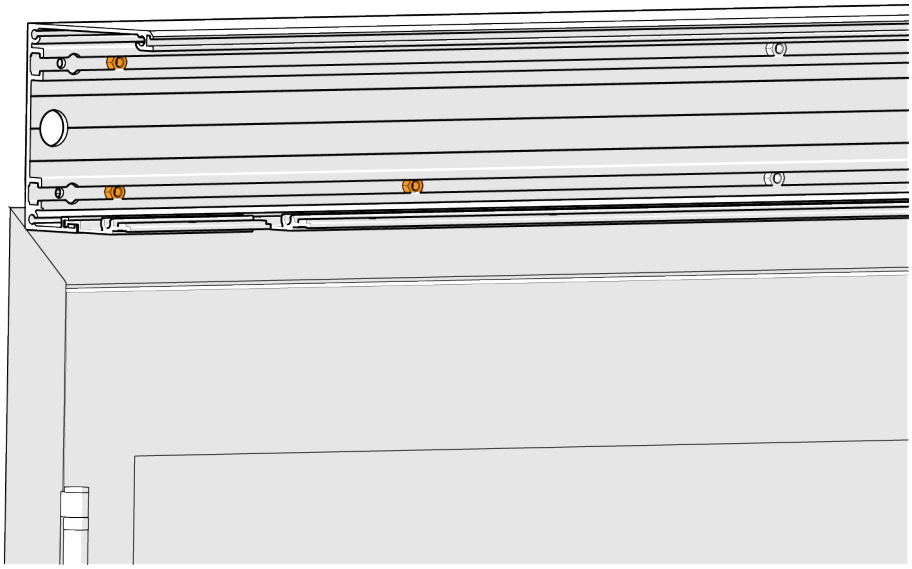

7. Assemble the operator spindle as shown.

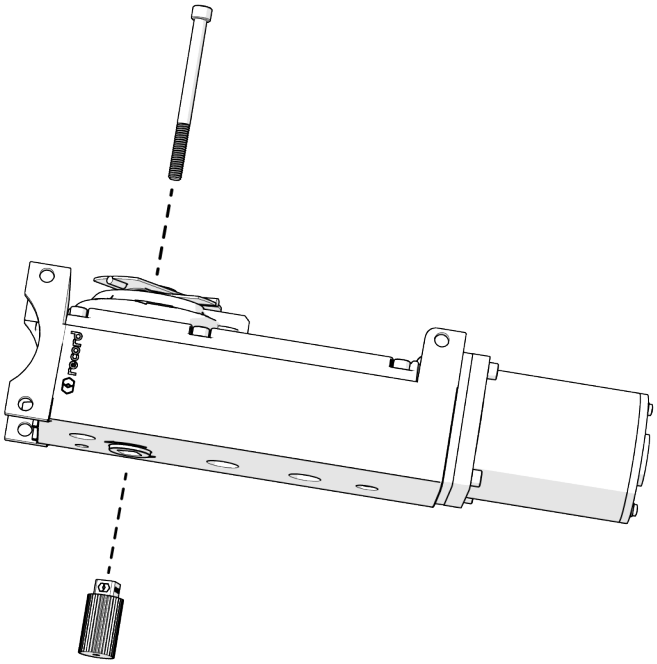

8. Tighten the spindle bolt (5/16”-18 x 4”) using an Allen wrench.

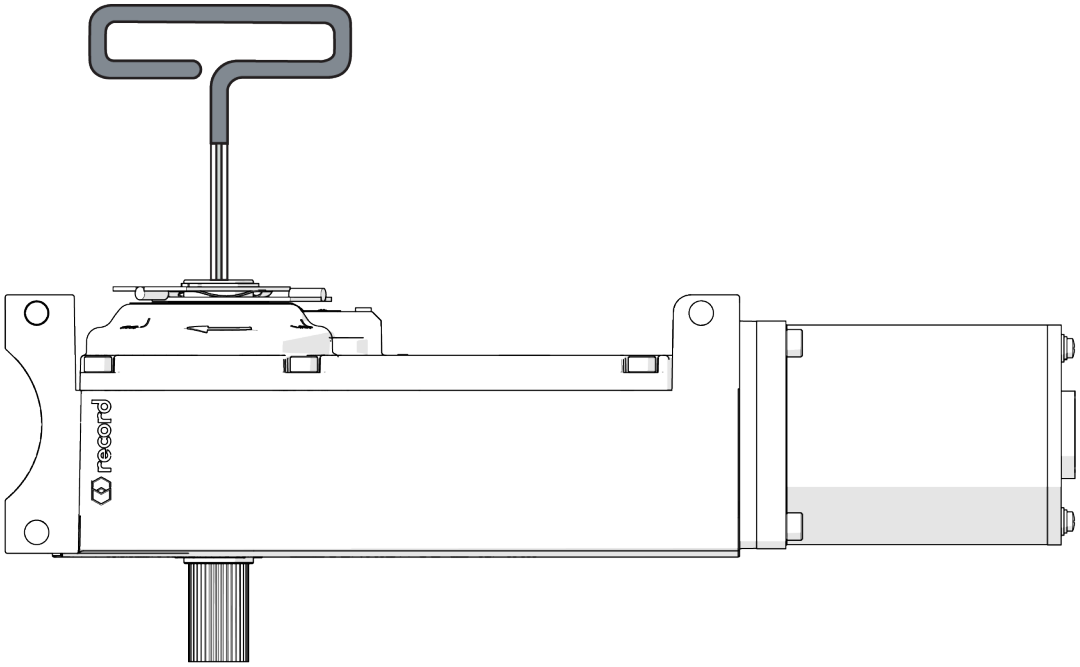

9. Using the three (3) bolts, mount the operator to the header. Do not fully tighten the screws.

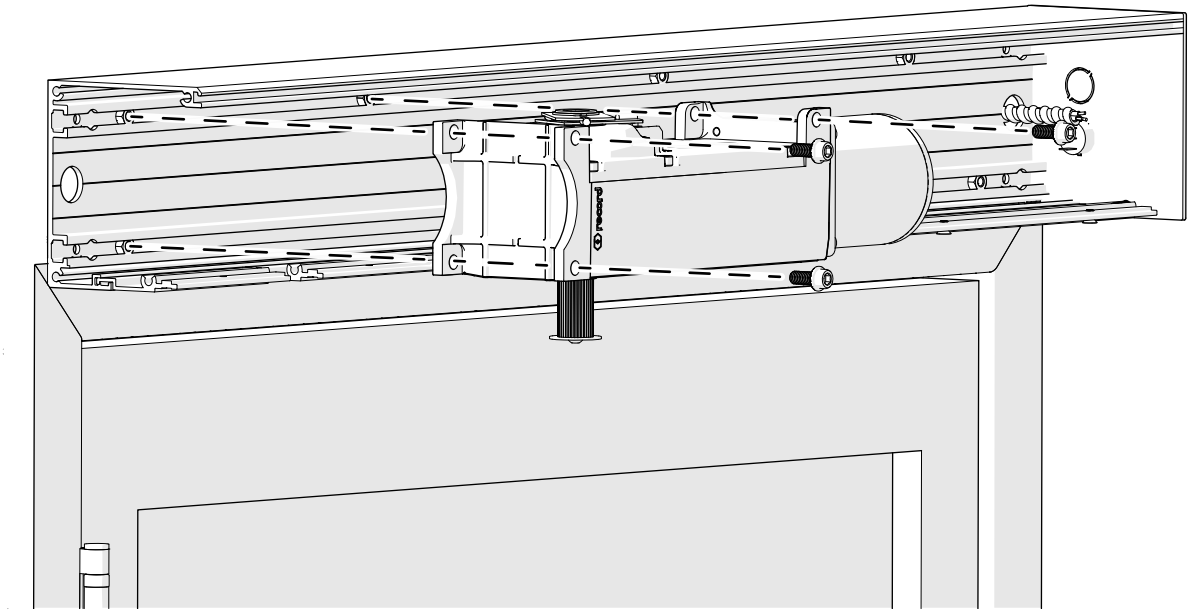

10. Install the end cap using the original four (4) screws (1/4”-20 x 3 x 3/4”).

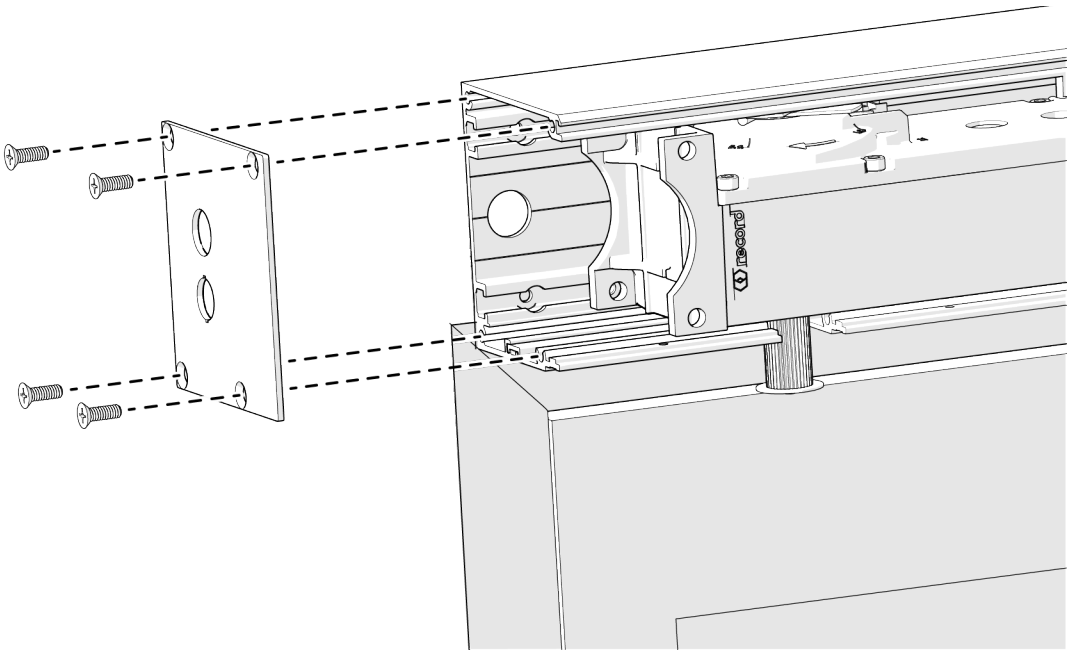

11. Position the operator until its mounting tab is 2 1/16” (52mm) from the inside of the end cap and then tighten the three bolts to secure the operator to the header.

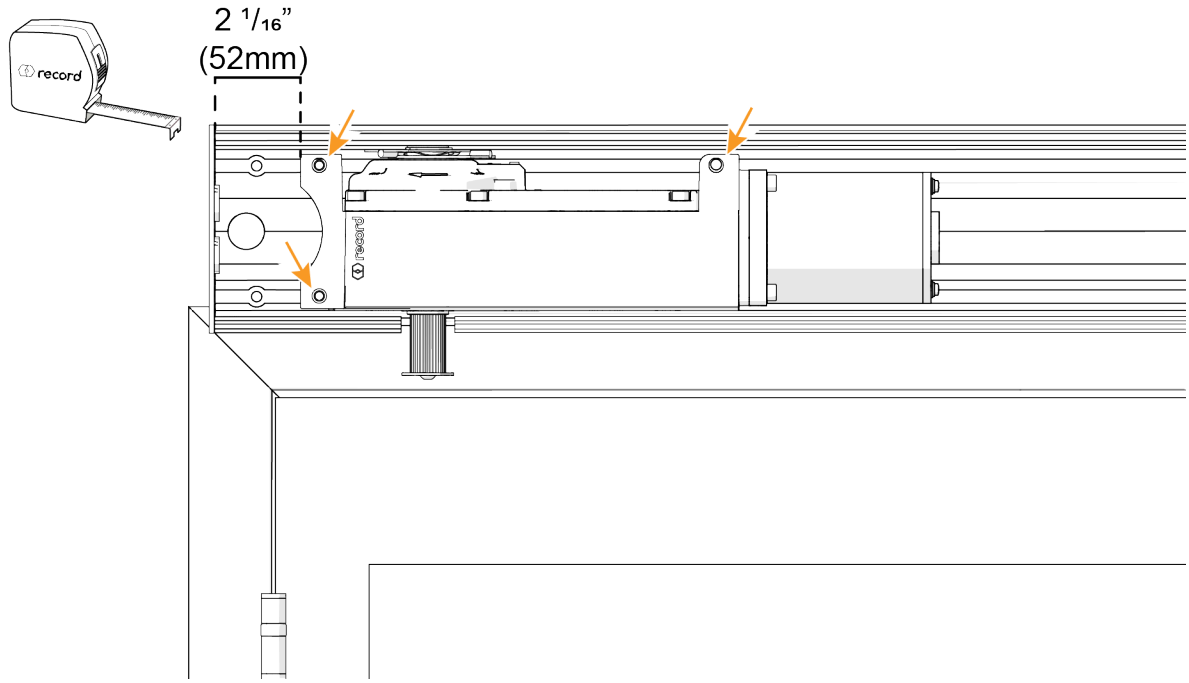

12. Verify that the four (4) control unit mounting nuts are positioned properly in the header channels.

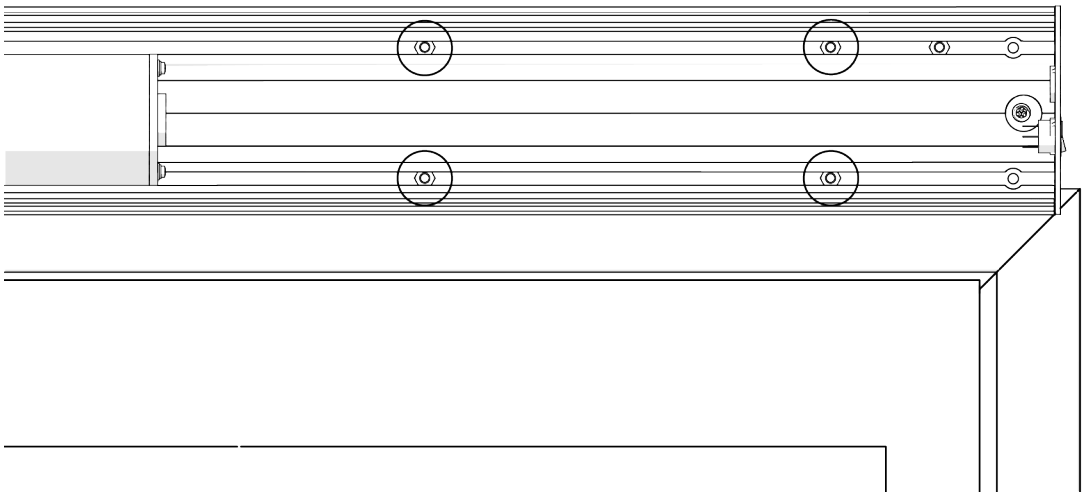

13. Carefully mount the control unit to the header channel using the original four (4) bolts and then securely tighten the bolts.

CAUTION

To reduce the possibility of electrostatic damage to the circuit board, avoid touching it with bare hands unless you are properly grounded for ESD.

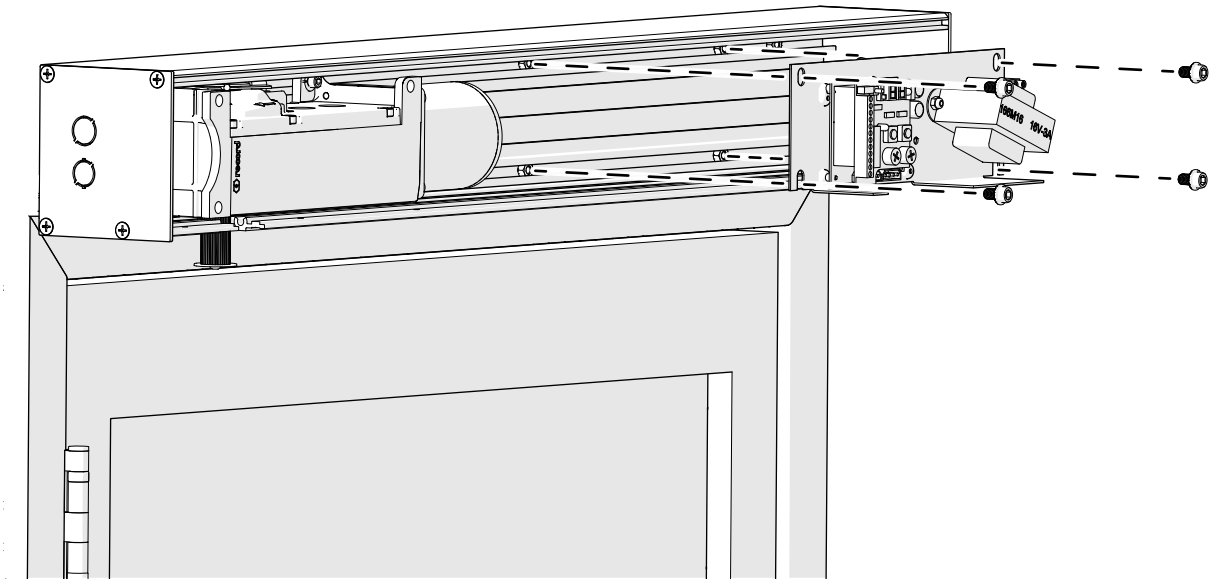

14. If your configuration includes the optional power supply, verify that the power supply mounting nut is positioned properly in the header channel.

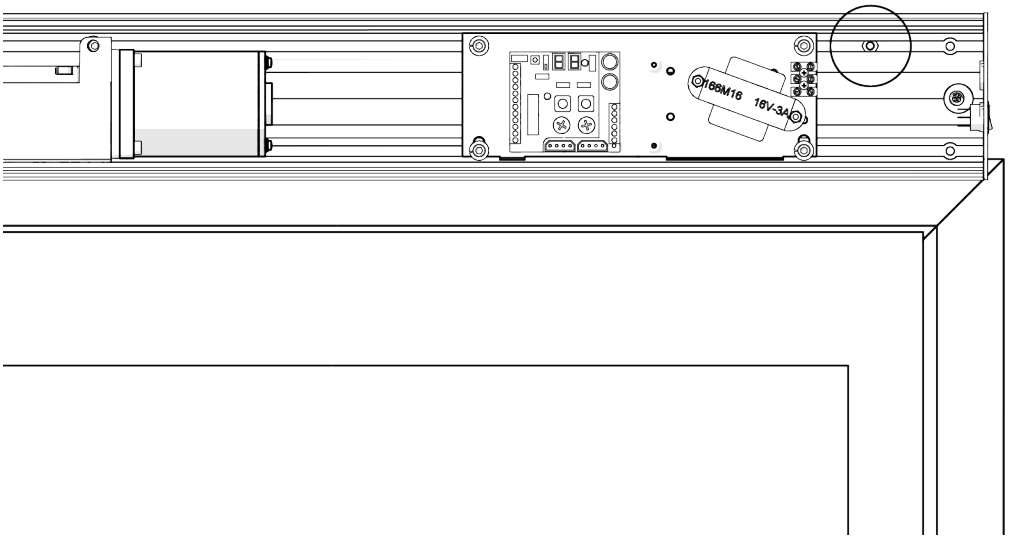

15. Carefully mount the power supply to the header using the original spacer, washer and bolt.

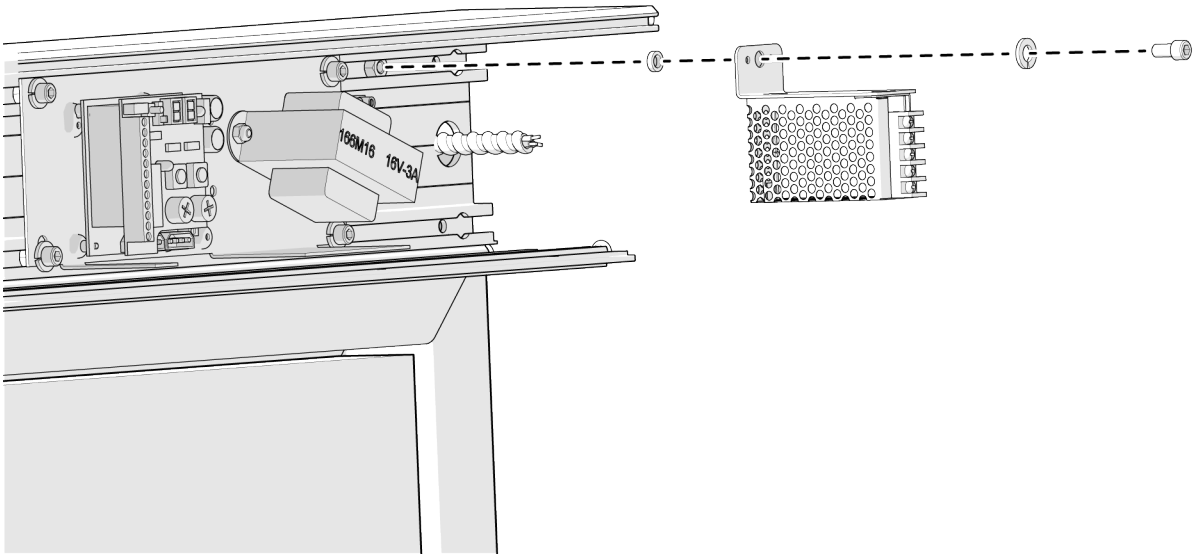

16. Install the end cap using the original four (4) screws (1/4”-20 x 3 x 3/4”).

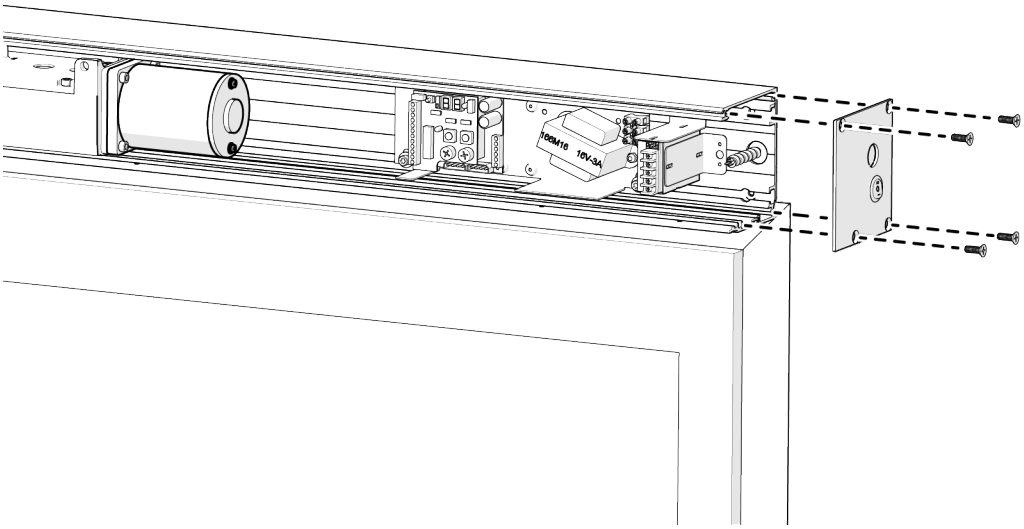

5.4.4 Mounting the Left Hand Pull Header

The bottom of the header assembly on pull installations is mounted 1 3/8” (34mm) from the bottom of the door jamb header. If the door frame extends out away from the wall, then the gap between the back face of the header and the wall above the door frame will need to be filled with solid backing material.

Before fastening the operator header to the door frame, verify that the access holes for the high and low voltage wires will reach their connection point.

For pull applications, the operator header will be mounted to the same side of the door where the hinges are installed on the door frame.

NOTICE

In typical installations, the operator header length equals the width of the door opening plus 3”.

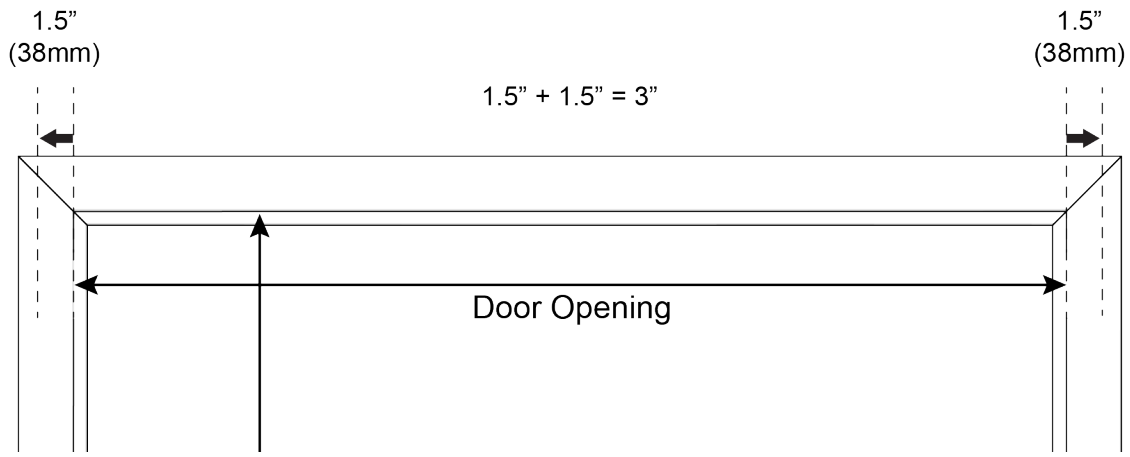

1. On the door frame header, measure 1.5” (38mm) from the door opening on the right side (where the hinges are installed) and place a mark.

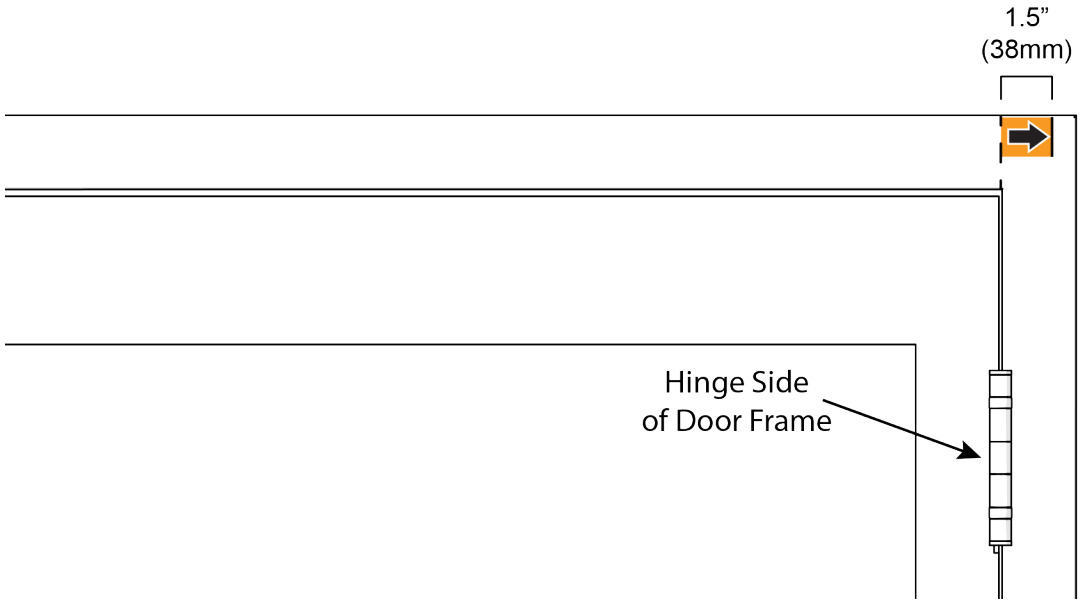

CAUTION

The header must be installed 1.5” from the hinge side regardless of whether the header is sized appropriately to the door opening.

2. On the door frame header, measure up 1 3/8” (34mm) from the door opening and place a mark. This measurement should be consistent from left-to-right.

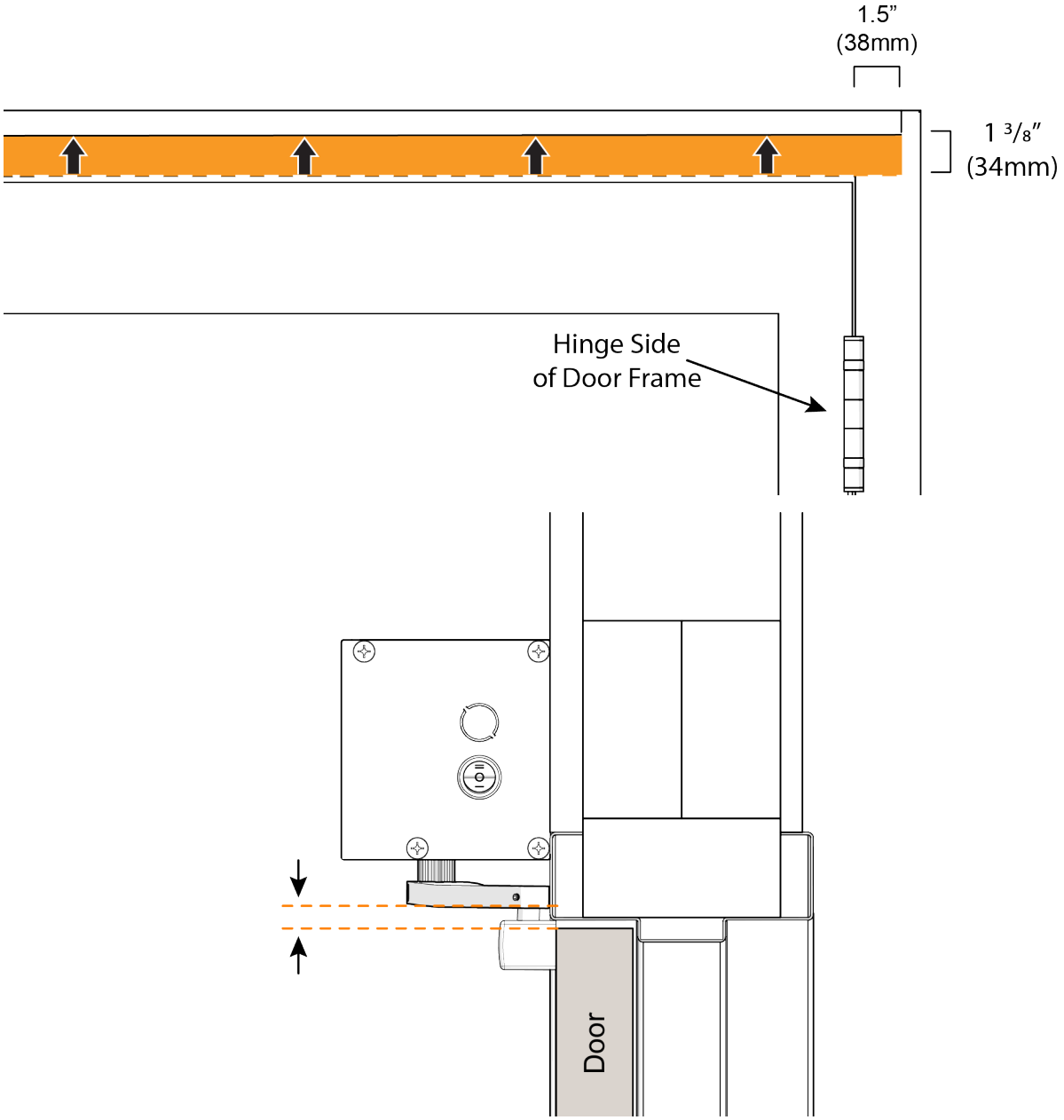

NOTICE

The header should be mounted so that the main drive pinion safety washer (2) and machine screw (1) are above the top of the door so that the spindle does not obstruct the swing path of the door.

3. Install the long filler plate on the left side of the header.

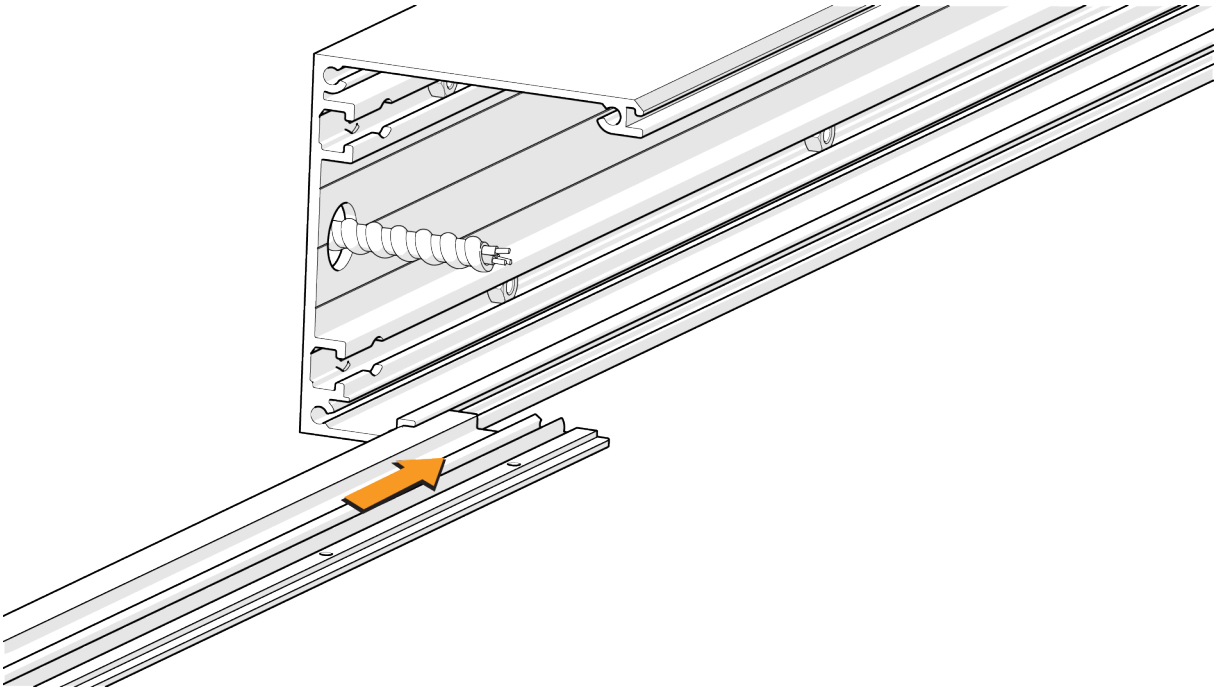

4. Install the short filler plate on the right side of the header.

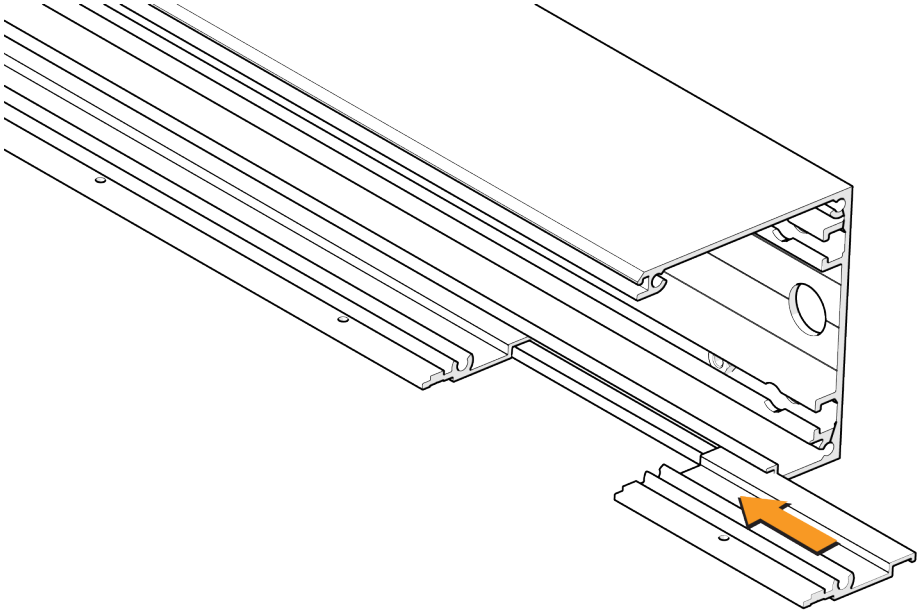

5. Align the header to the marks (1 and 2) that were previously made. Secure the header with a minimum of six (6) #14 x 1” Pan Quad Type A screws. Ensure the header is level.

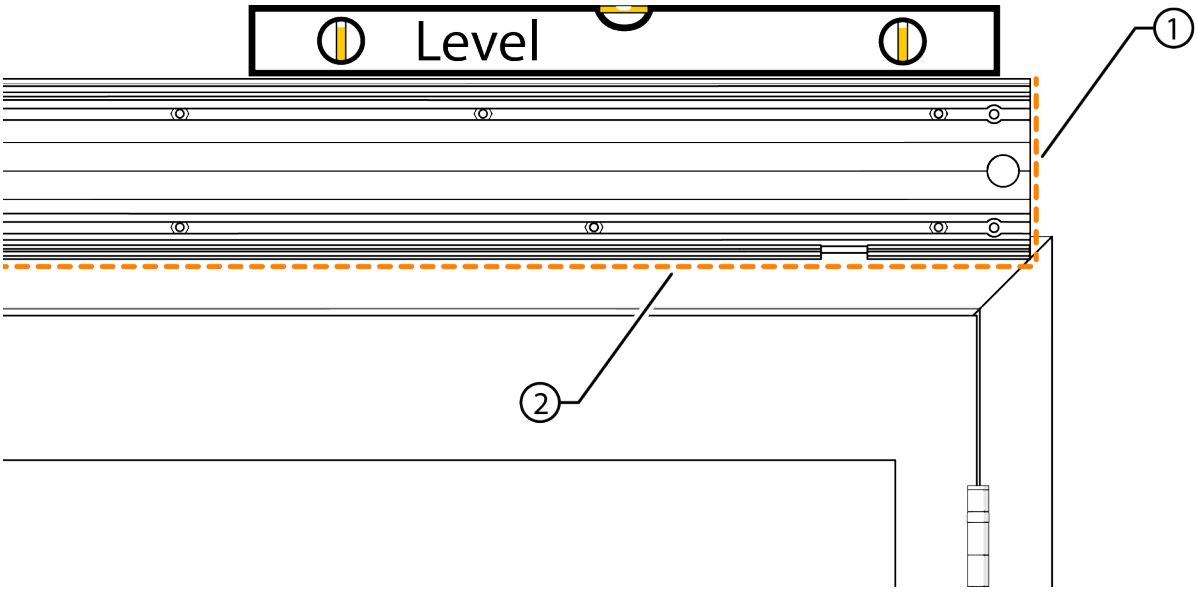

NOTICE

The locations of the screws will depend on mounting conditions and the application.

6. Verify there are three (3) 5/16-18” hex nuts inserted in the header channels.

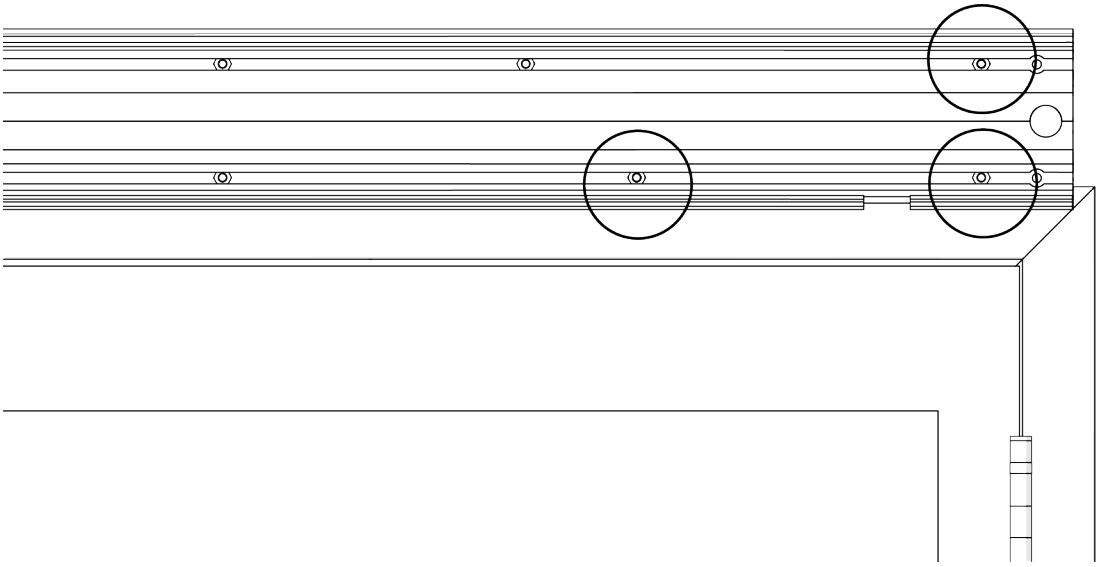

7. Assemble the operator spindle as shown below.

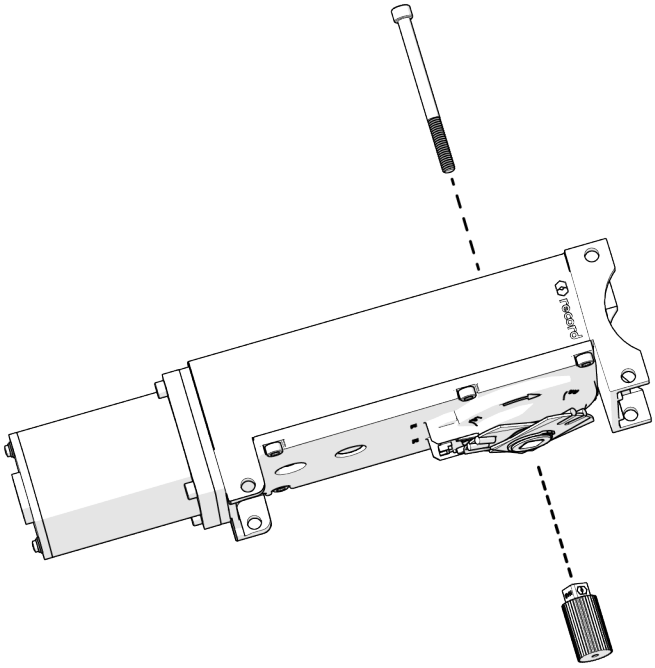

8. Tighten the spindle bolt (5/16”-18 x 4”) using an Allen wrench.

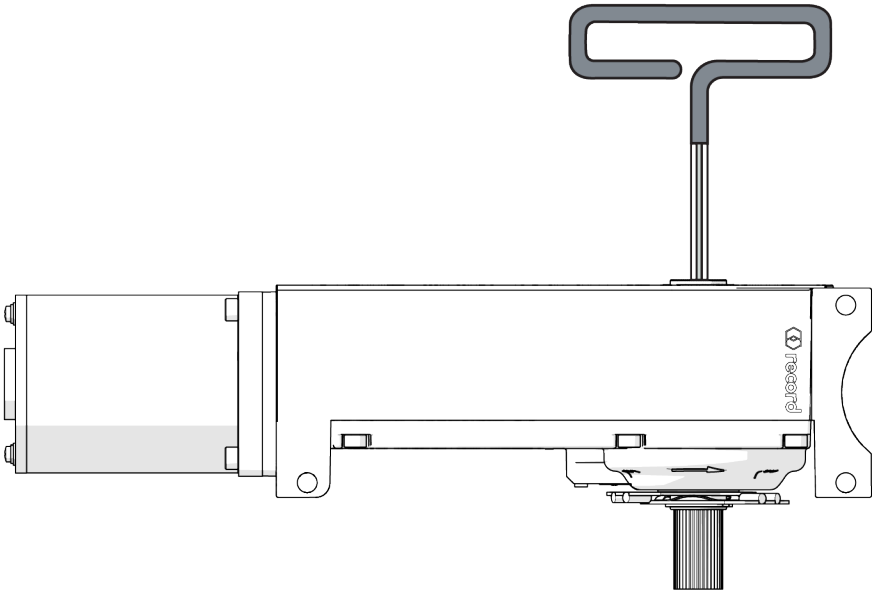

9. Using the original three (3) bolts, mount the operator to the header panel. Do not fully tighten the screws.

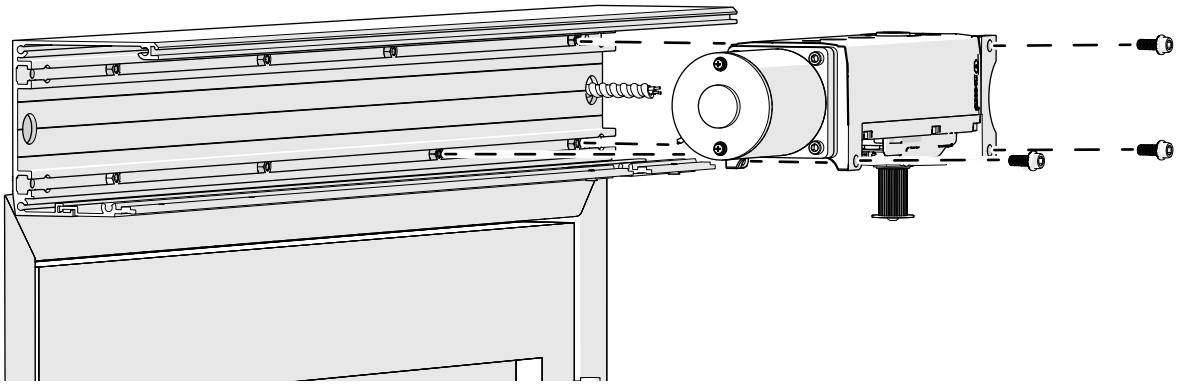

10. Reinstall the right side end cap using the original four (4) screws (1/4”-20 x 3 x 3/4”).

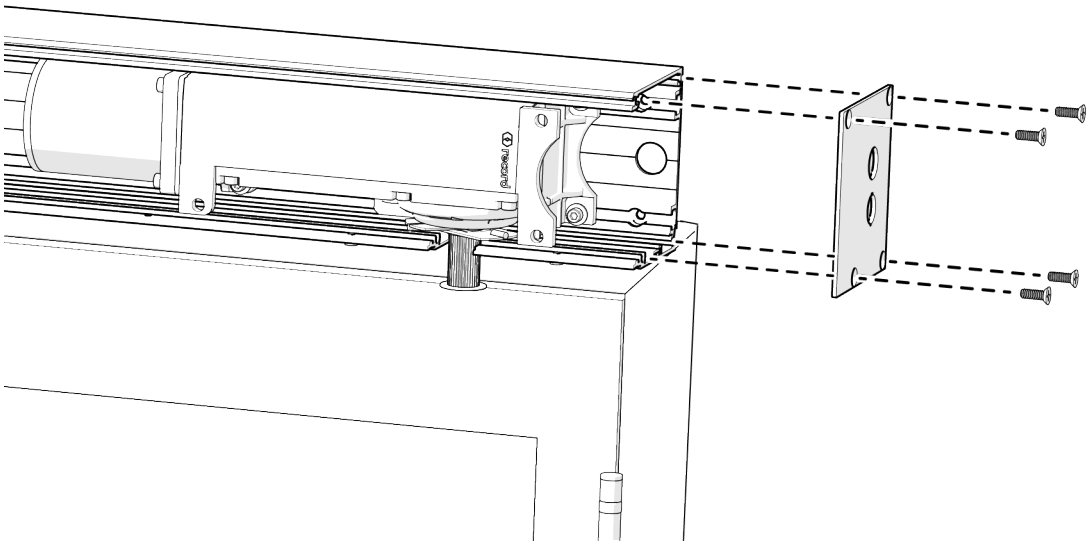

11. Position the operator until its mounting tab is 2 1/16” (52mm) from the inside of the end cap and then tighten the three bolts to secure the operator to the header.

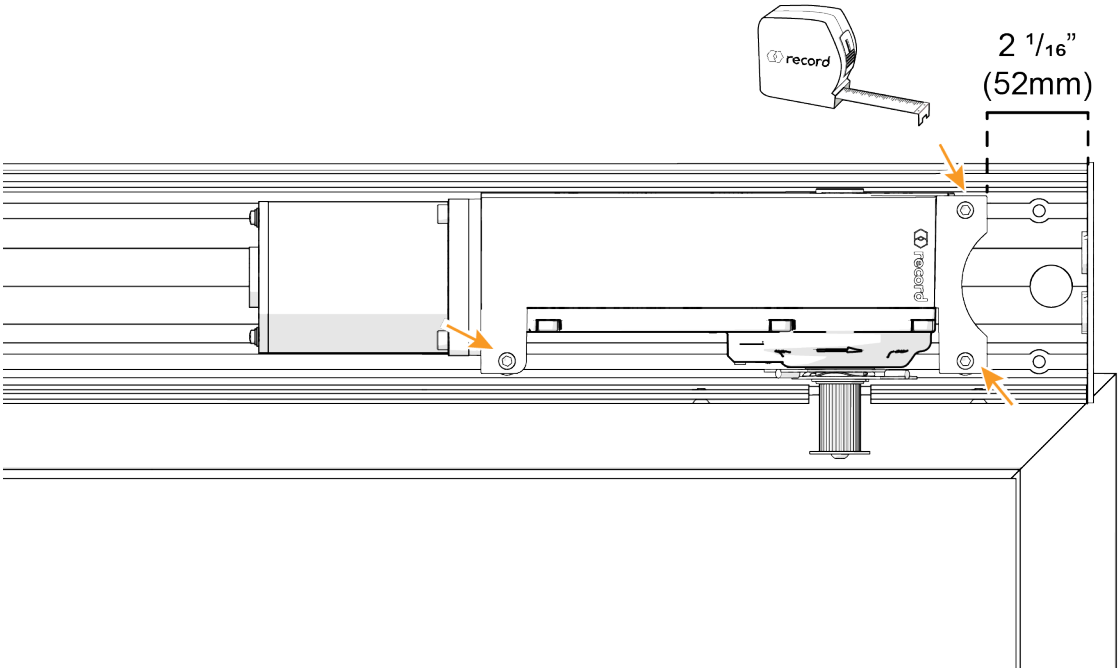

12. Verify that the four (4) control unit mounting nuts are positioned properly in the header.

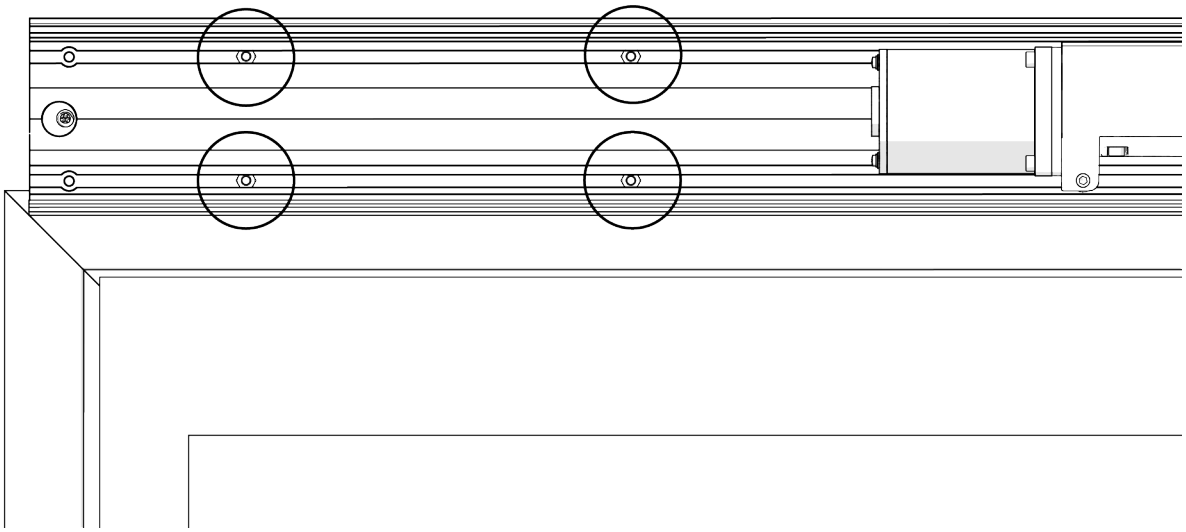

13. Carefully mount the control unit to the header using the original four (4) bolts and then securely tighten the bolts.

CAUTION

To reduce the possibility of electrostatic damage to the circuit board, avoid touching it with bare hands unless you are properly grounded for ESD.

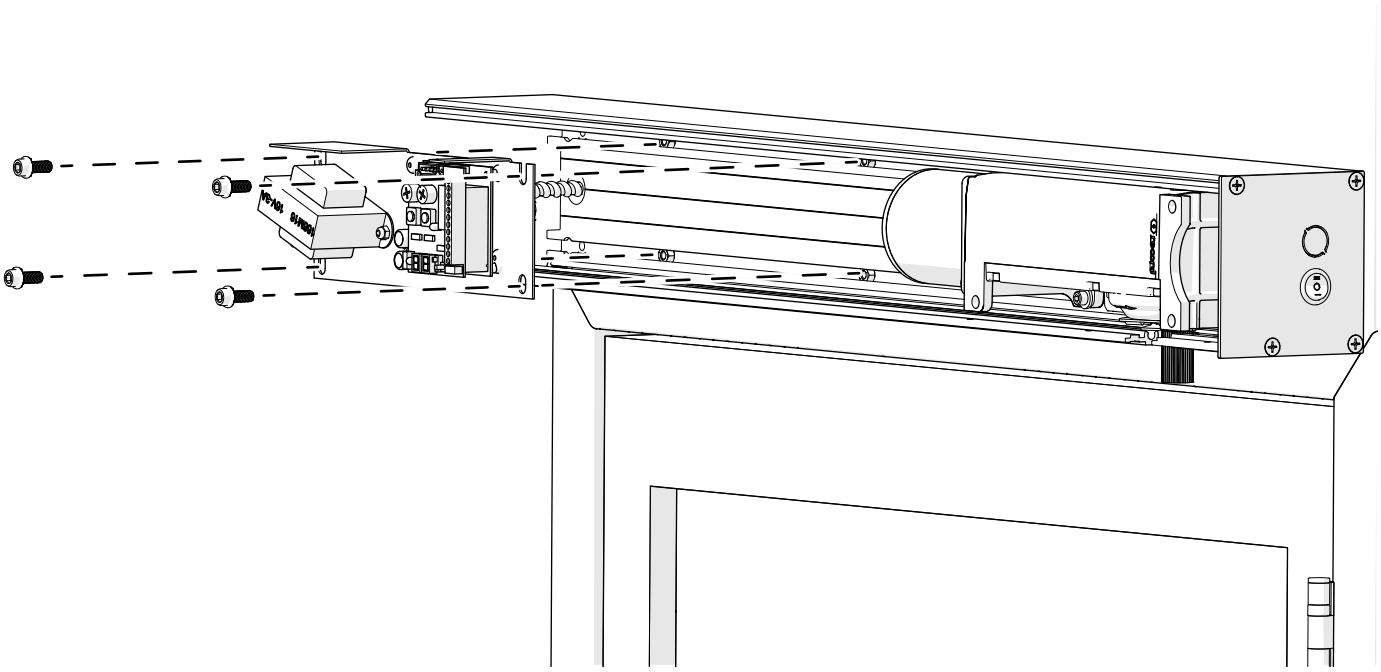

14. If your configuration includes the optional power supply, verify that the power supply mounting nut is positioned properly in the header channel.

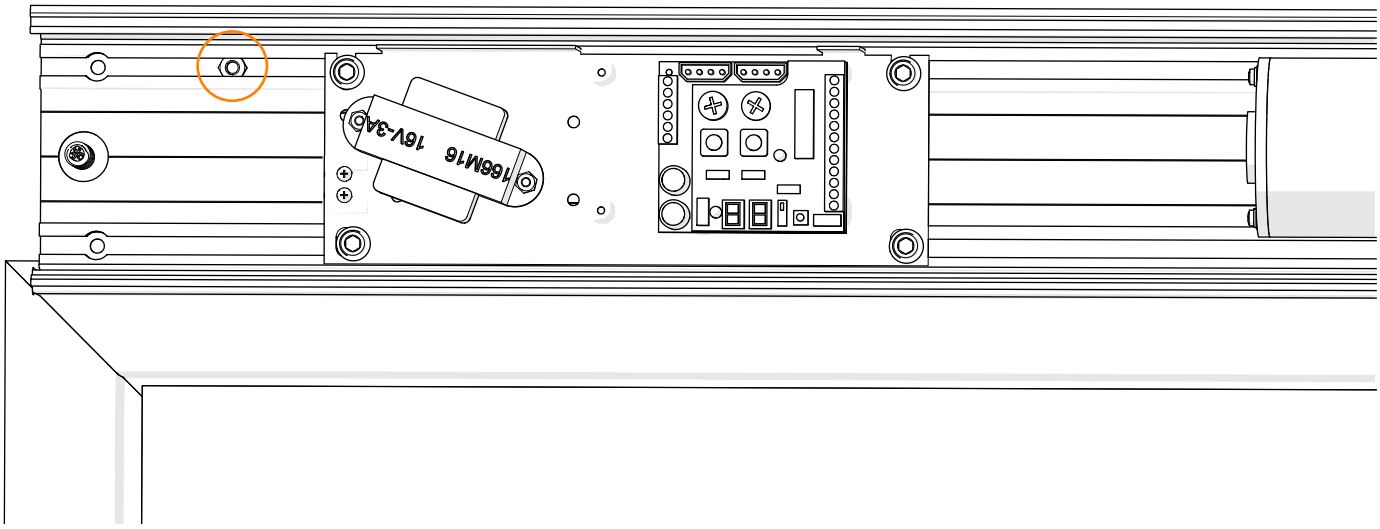

15. Carefully mount the power supply to the header using the original spacer, washer and bolt.

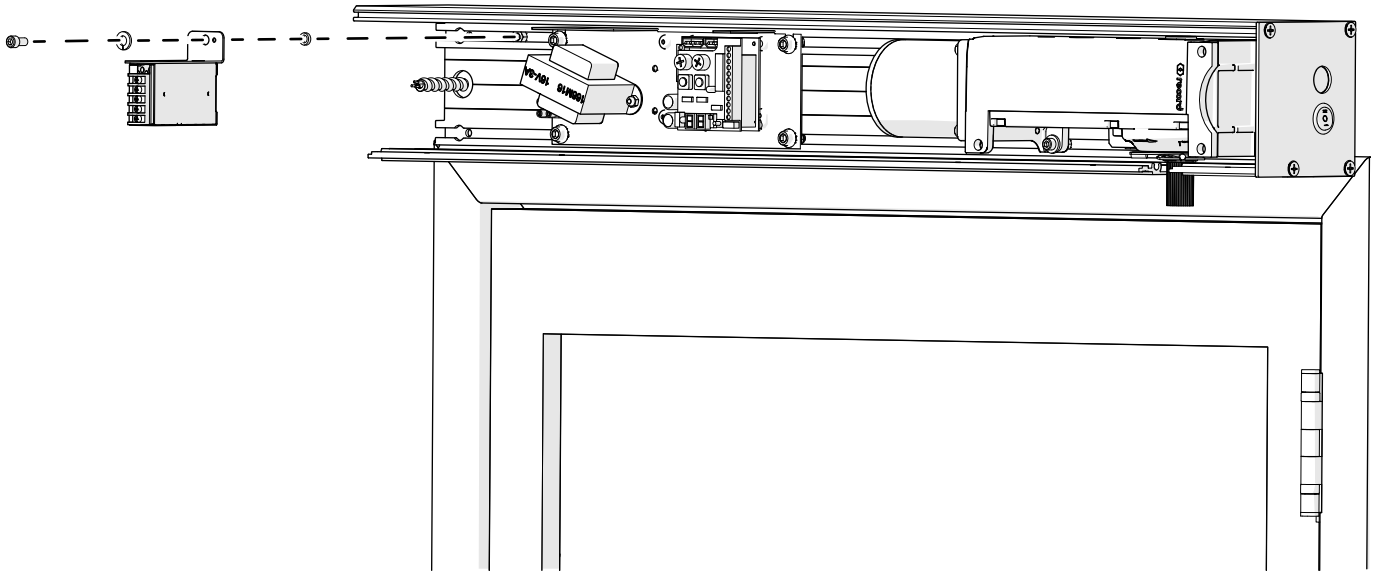

16. Install the end cap using the original four (4) screws (1/4”-20 x 3 x 3/4”).

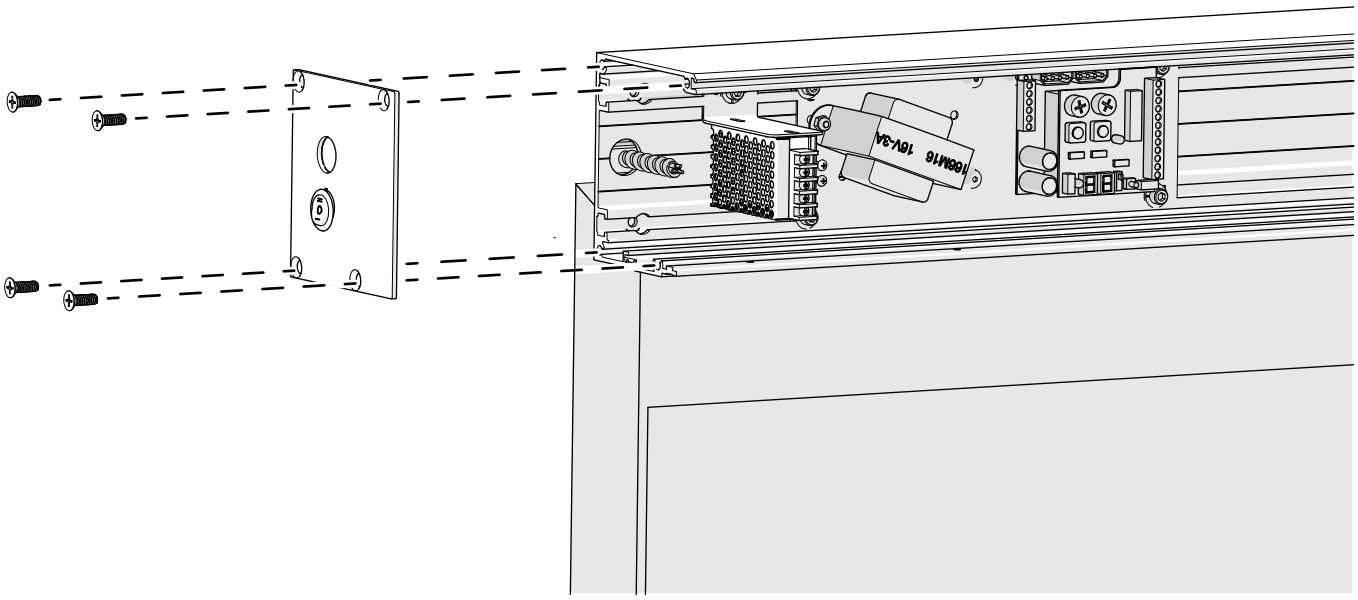

6. Electrical Connections

Main power should always come through the header from the latch side of the door which is on the opposite side from the hinges.

DANGER

Make sure that the main power line has been disconnected from utility power prior to connection to the operator.

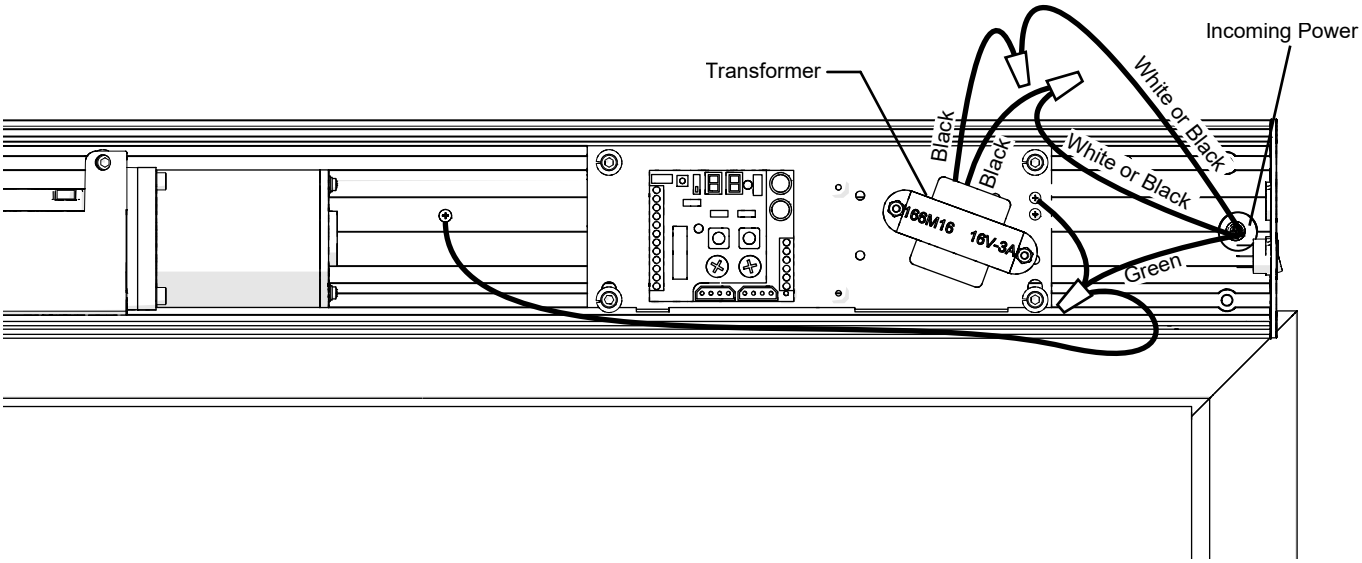

1. Using a wire nut, connect the white wire from the main power line to either of the black wires coming out of the transformer.
2. Using a wire nut, connect the black wire from the main power line to the other black wire coming out of the transformer.
3. Connect the green wire from the main power line to a ground screw attached to the control unit mounting bracket. Then add another grounding wire to the header and connect all three wires with a wire nut.

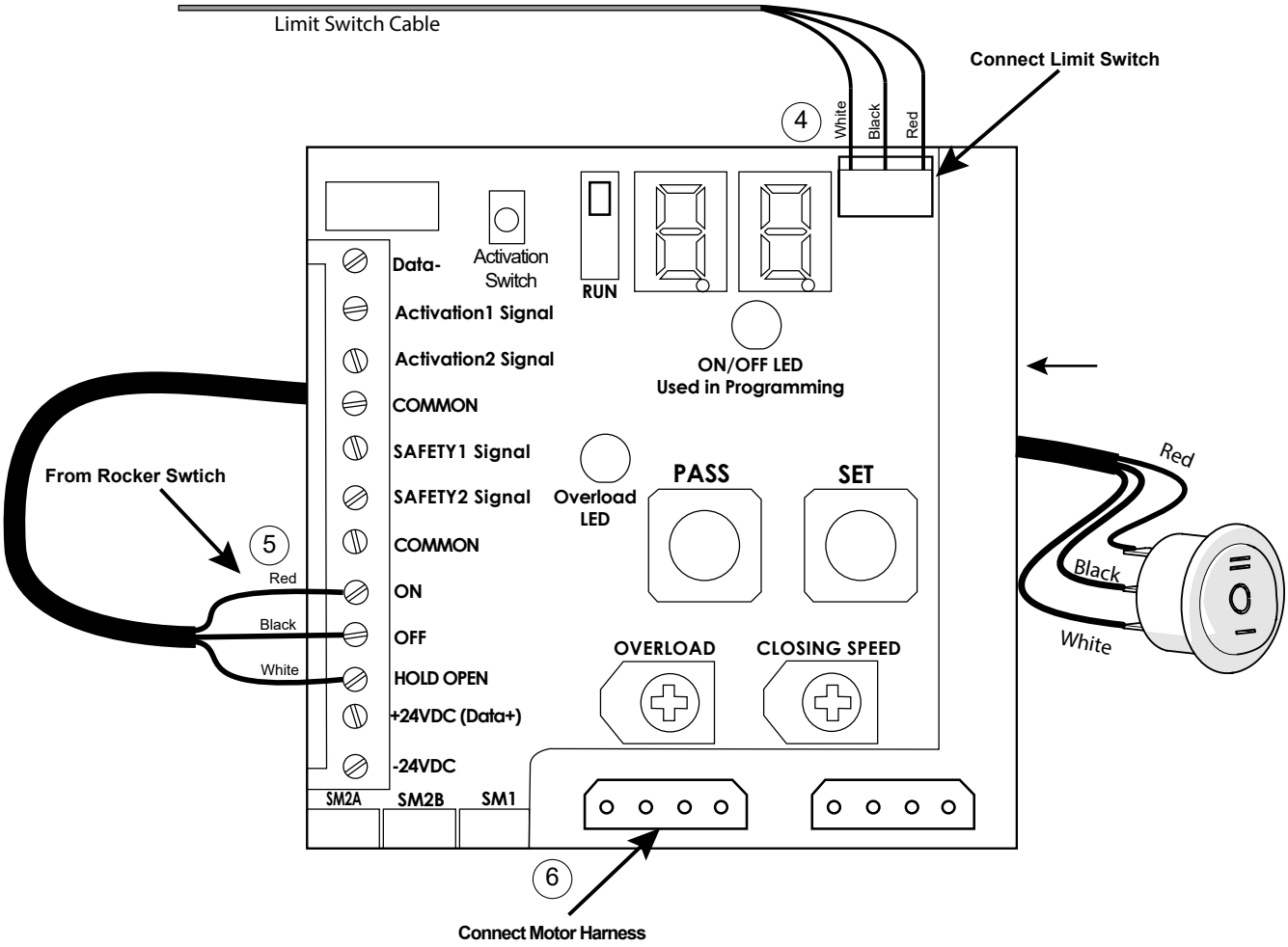

4. Connect the 3-wire limit switch connector to the control unit.

5. Connect the three (3) wires to the rocker switch and control unit as shown in the image above.

NOTICE

The wire colors may change but the connection points should remain consistent to the image above.

NOTICE

If the rocker switch is located on the right side of the header as you are facing it, then route its cable behind the control unit for its final connection to the control unit. This arrangement creates a cleaner installation.

6. Connect the motor harness connector to the left port at the bottom of the control unit.

7. Arm Installation

7.1 Push Arm Components and Configurations

The push arm components consist of the Main Arm, Sleeve, Adjustable Rod (cut to length), and door shoe.

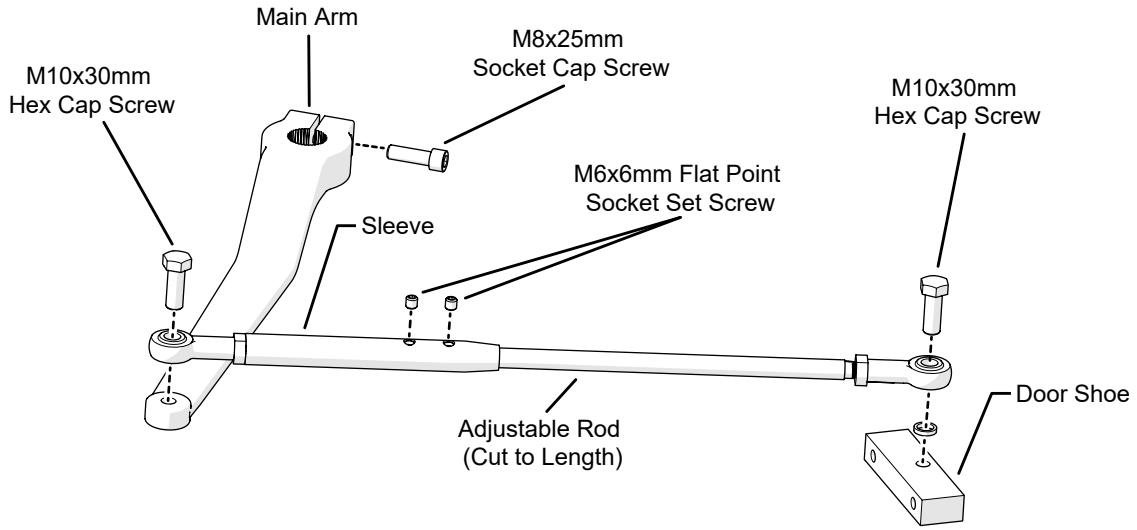

There are two (2) options for installing the operator arms depending on whether or not more clearance is necessary to allow for proper movement of the system through full opening and closing cycles.

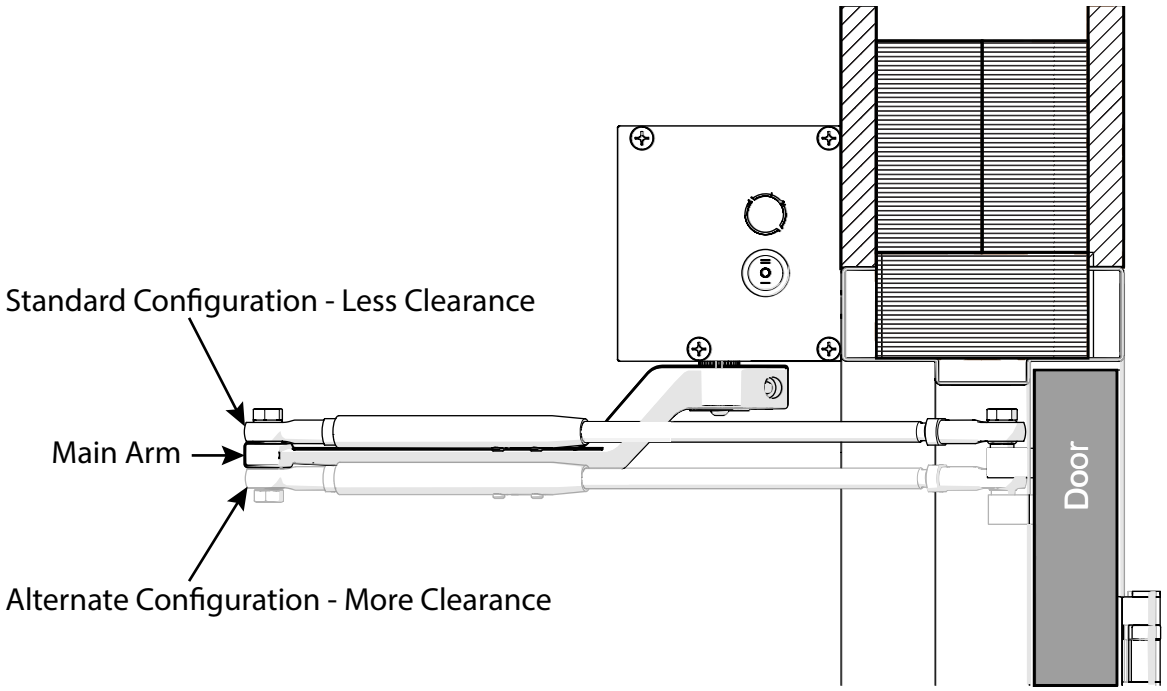

7.1.1 Standard Configuration

For the standard configuration, the sleeve and rod are positioned above the main arm. This configuration should be used when there is good clearance between the adjustable rod/door shoe and the top jamb of the door frame. The rod and sleeve are flexible at the ends where they are bolted which provides additional flexibility during installation.

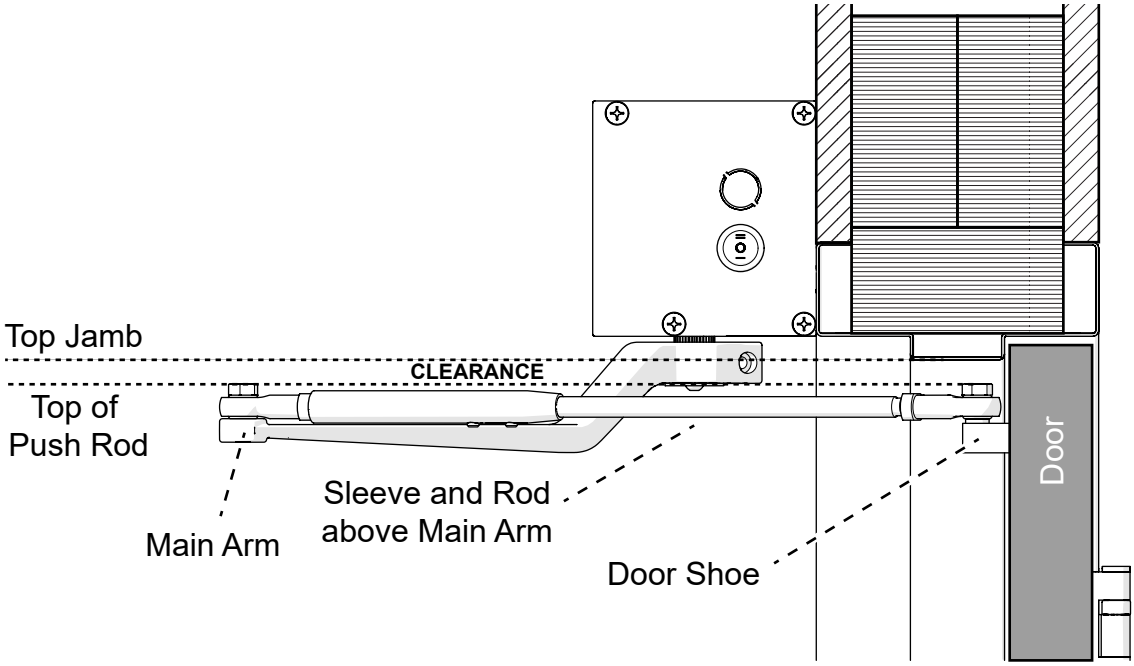

1. With the door in the open position, measure down 2 ¹/4” from the top of the door. Then measure 14 inches and 16 ¹/4” from the hinge side of the door. Mark these positions as the first and second holes for mounting the door shoe.

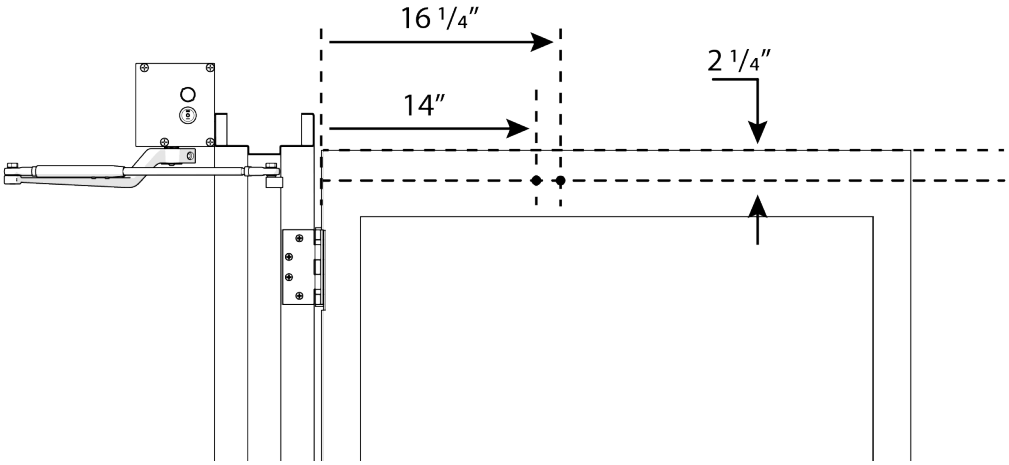

2. Using the appropriate hardware for the door type, mount the door shoe to the door.

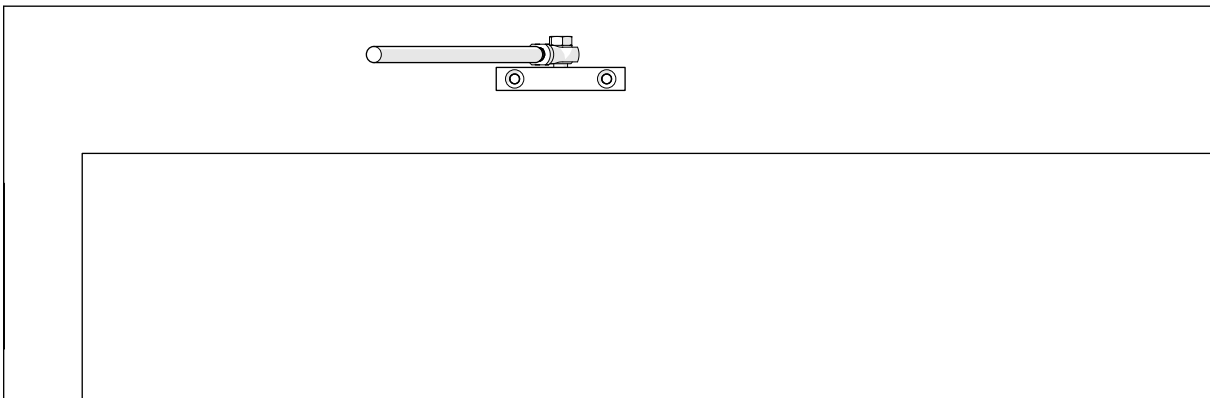

3. If necessary, install the rod to the door shoe using the included M10x30mm hex cap screw and washer.

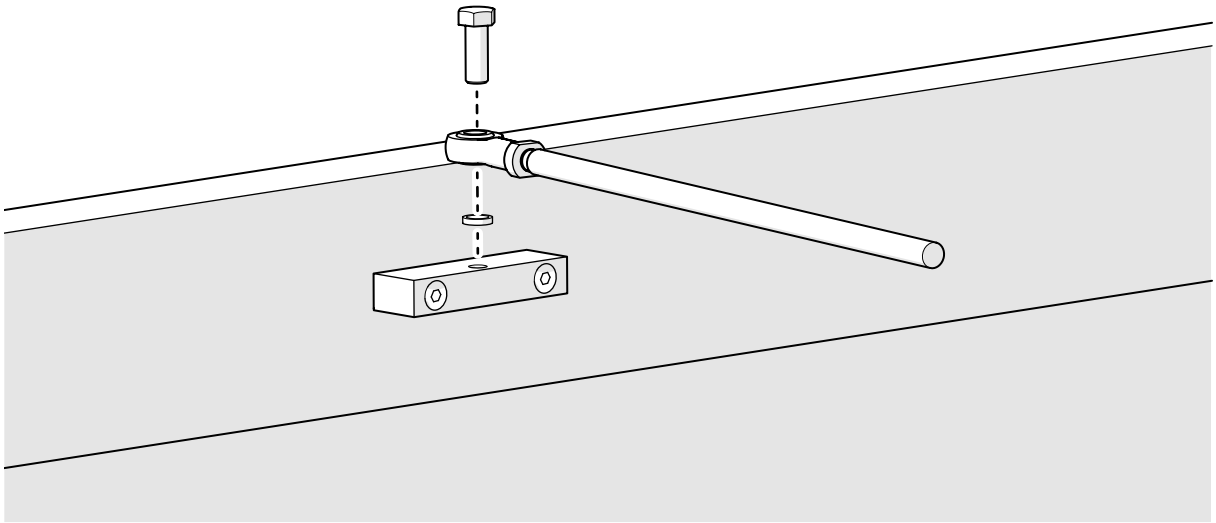

4. Align the main arm to approximately 80 degrees from the face of the closed door and push it over the splines on the spindle.

View from Top

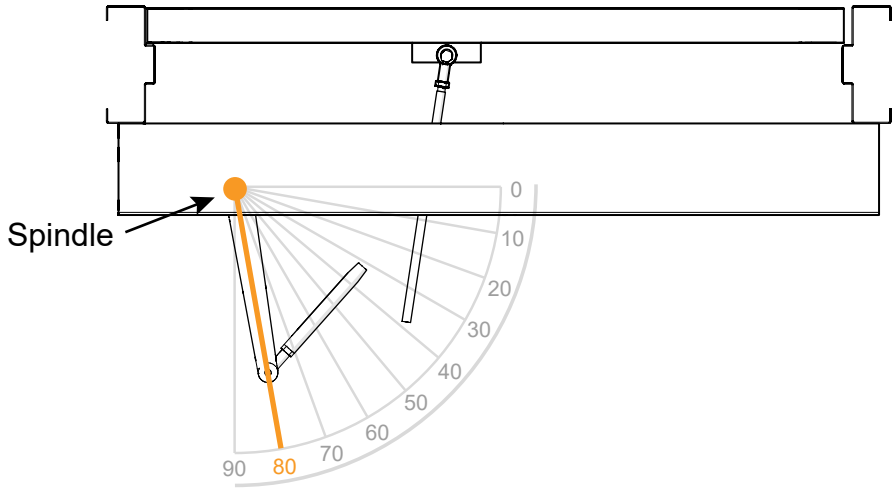

5. Secure the main arm to the spindle using the included screw and washer.

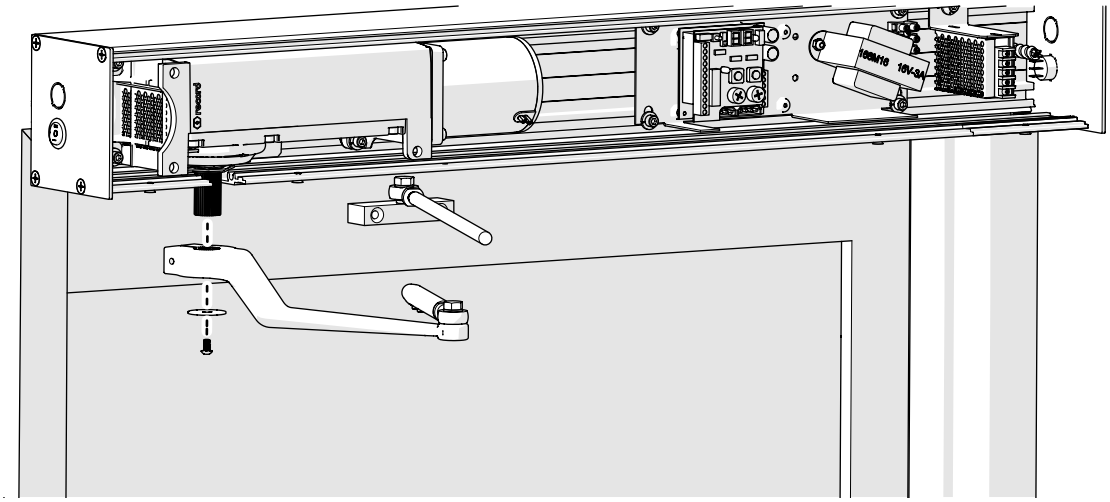

6. With the door closed, align the rod and the sleeve and then mark the rod at 1 inch from the second set screw.

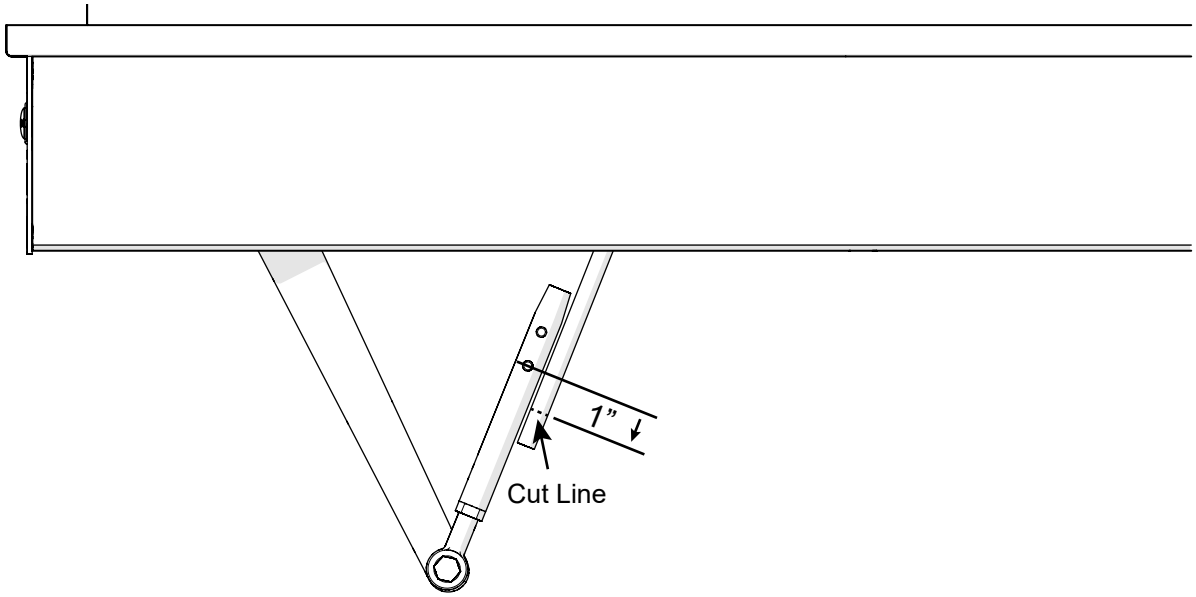

7. Cut the rod to size.

8. With the door slightly open, insert the rod into the sleeve until it bottoms out in the sleeve. Then, tighten both M6x6mm flat point socket set screws.

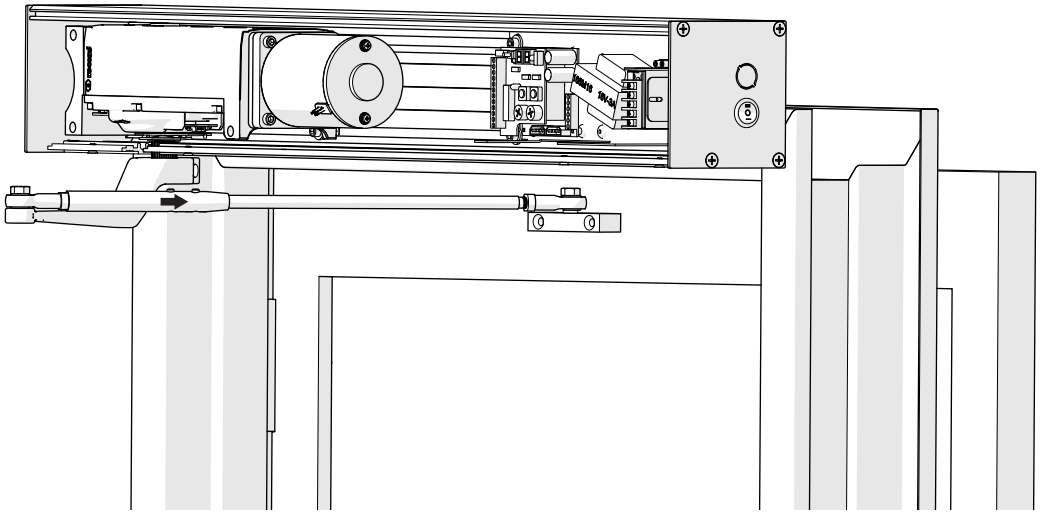

9. Loosen and remove the screw and washer securing the main arm to the spindle and remove the main arm from the spindle.

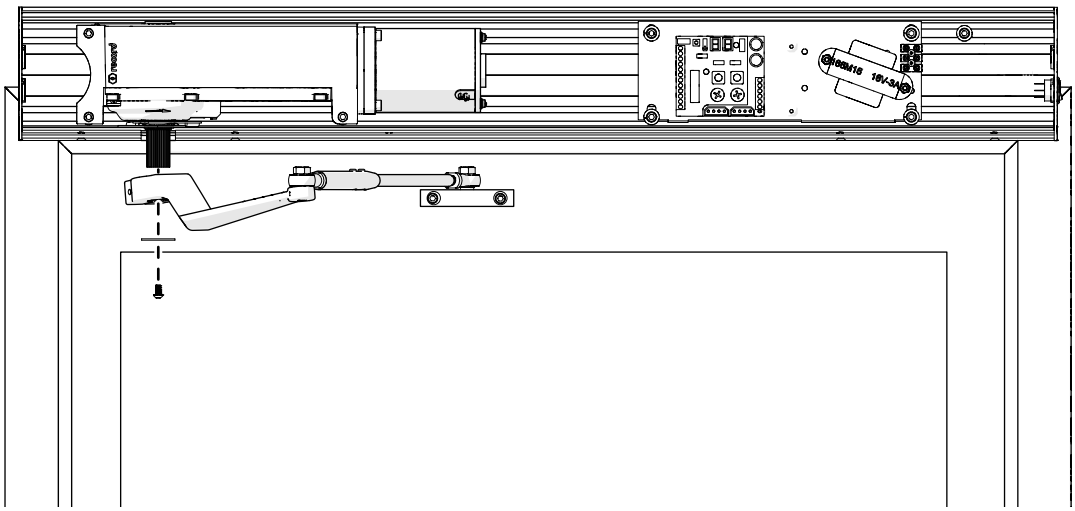

10. Disconnect the Reed Switch connector from the control unit.

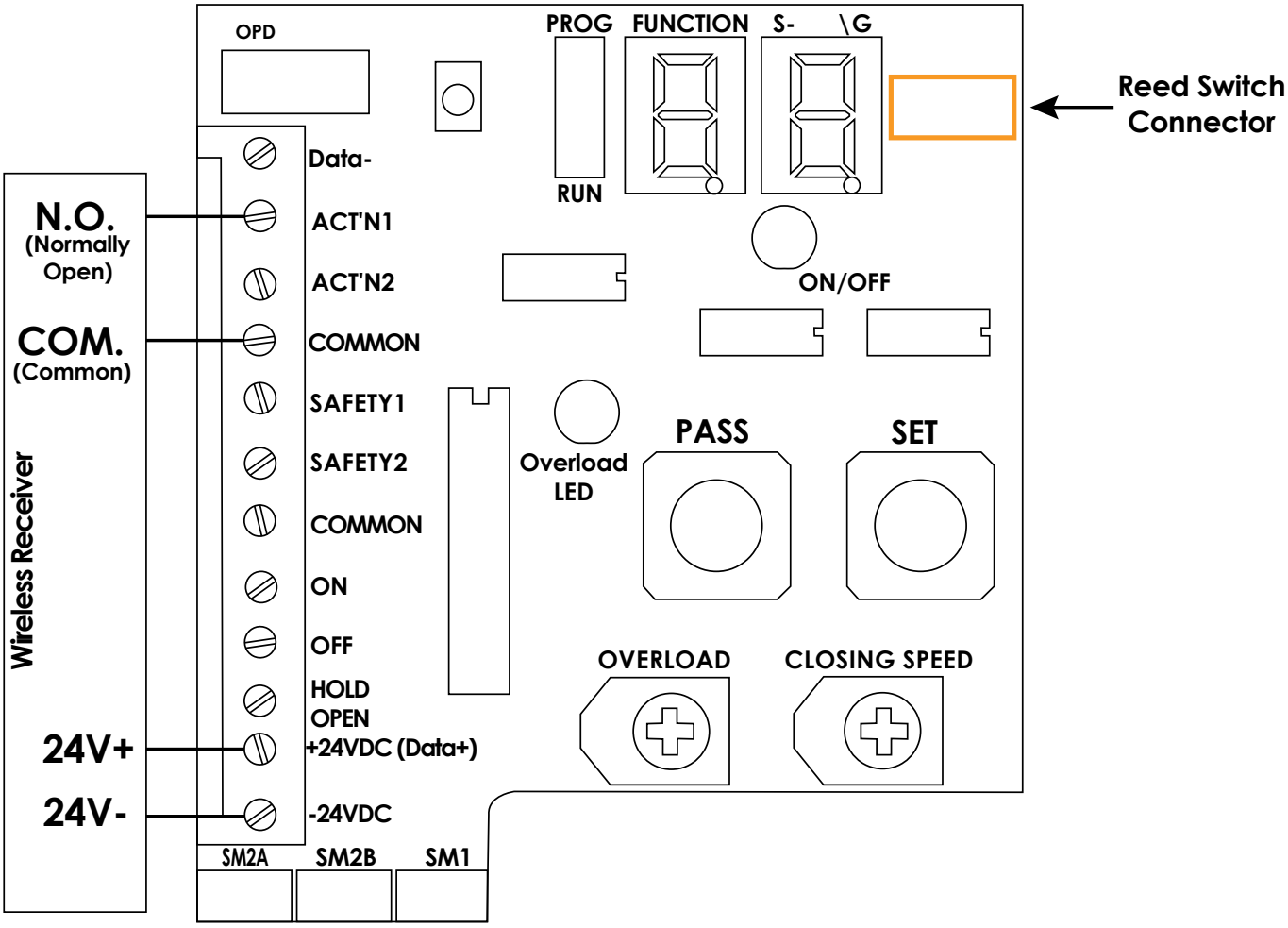

11. Set the Operator Switch on the header to Hold Open.

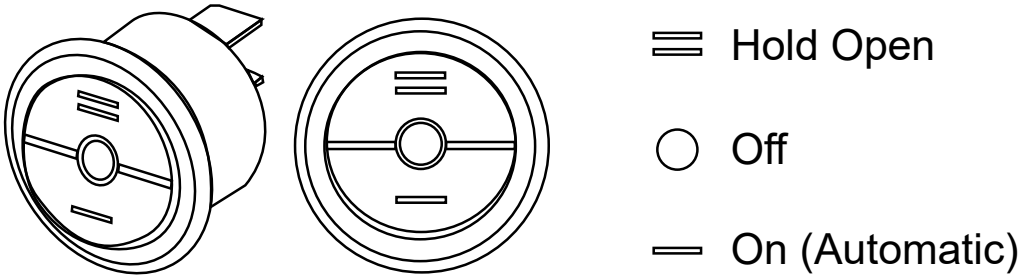

NOTICE

The spindle will turn until it reaches the built-in spline stop.

12. Reconnect the Reed Switch connector to the control unit.

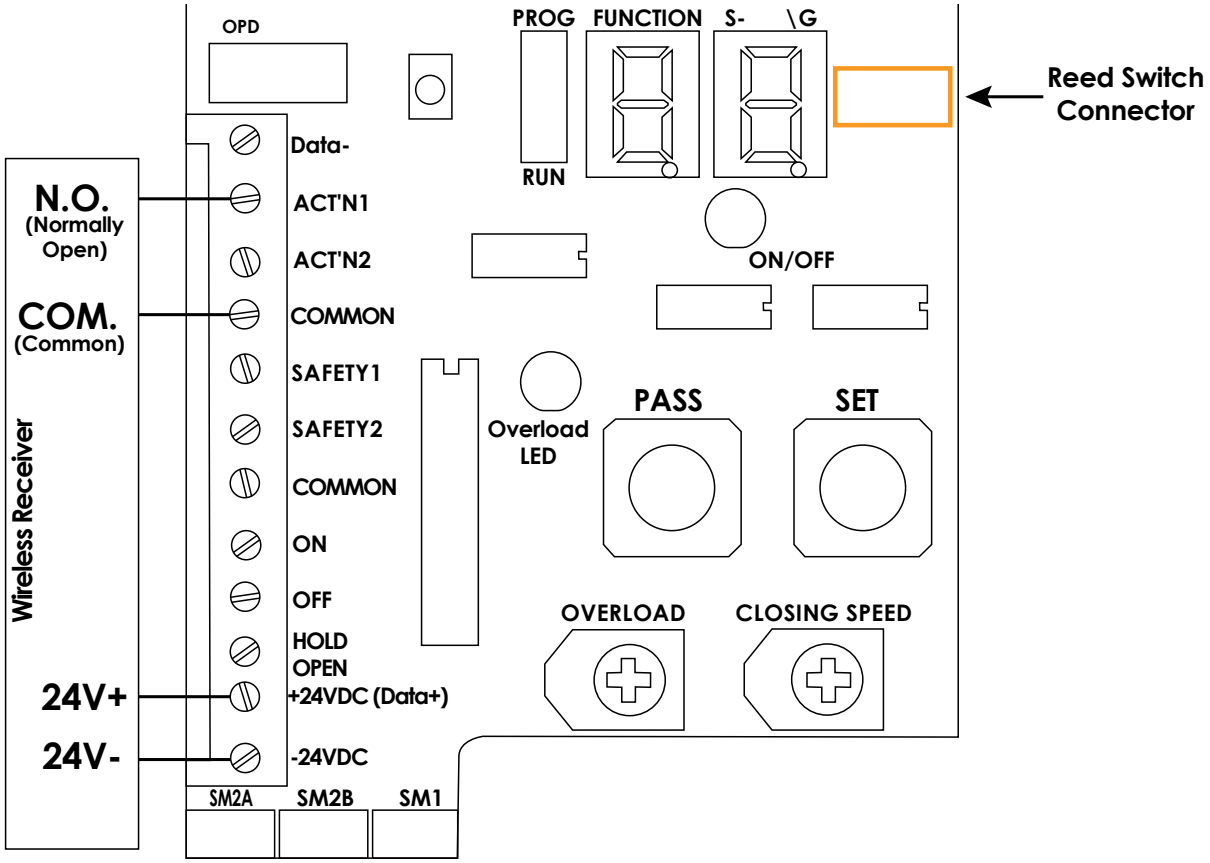

13. To prevent the spindle from oscillating back and forth, use a small flat head screwdriver to rotate the lower limit switch on the operator until the Back Check Magnet is pointing to the Back Check (B.C.) mark on the housing.

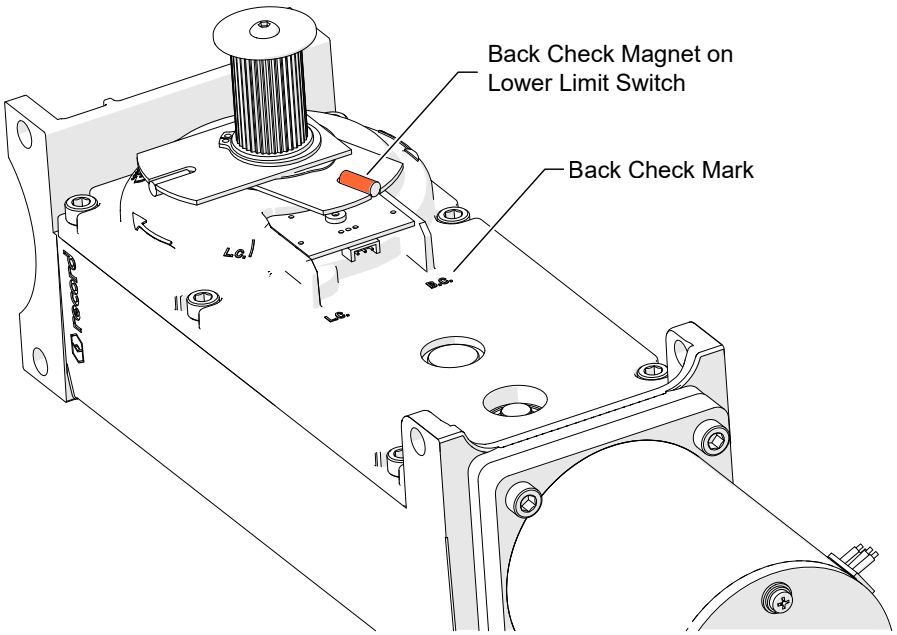

NOTICE

This can be accomplished with the operator still installed in the header.

NOTICE

This is not the final Back Check setting. After the physical installation has been completed, Back Check and Latch Check must be set again. Please refer to chapter called Operator Tuning.

14. Manually open the door to its fully-open position.

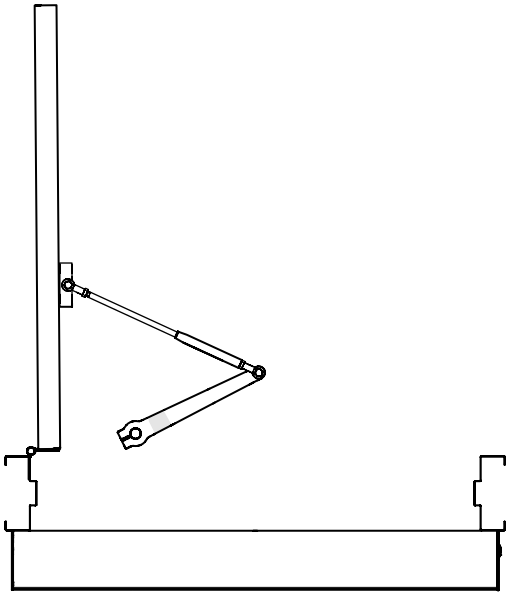

15. Attach the Main Arm to the spindle and secure it with the original washer (1/4” x 1-1/4”, Zinc) and screw (#10-32 x 3/8” BHCS, Zinc). Also tighten the M8x25 Socket Cap Screw that secures the main arm to the spindle.

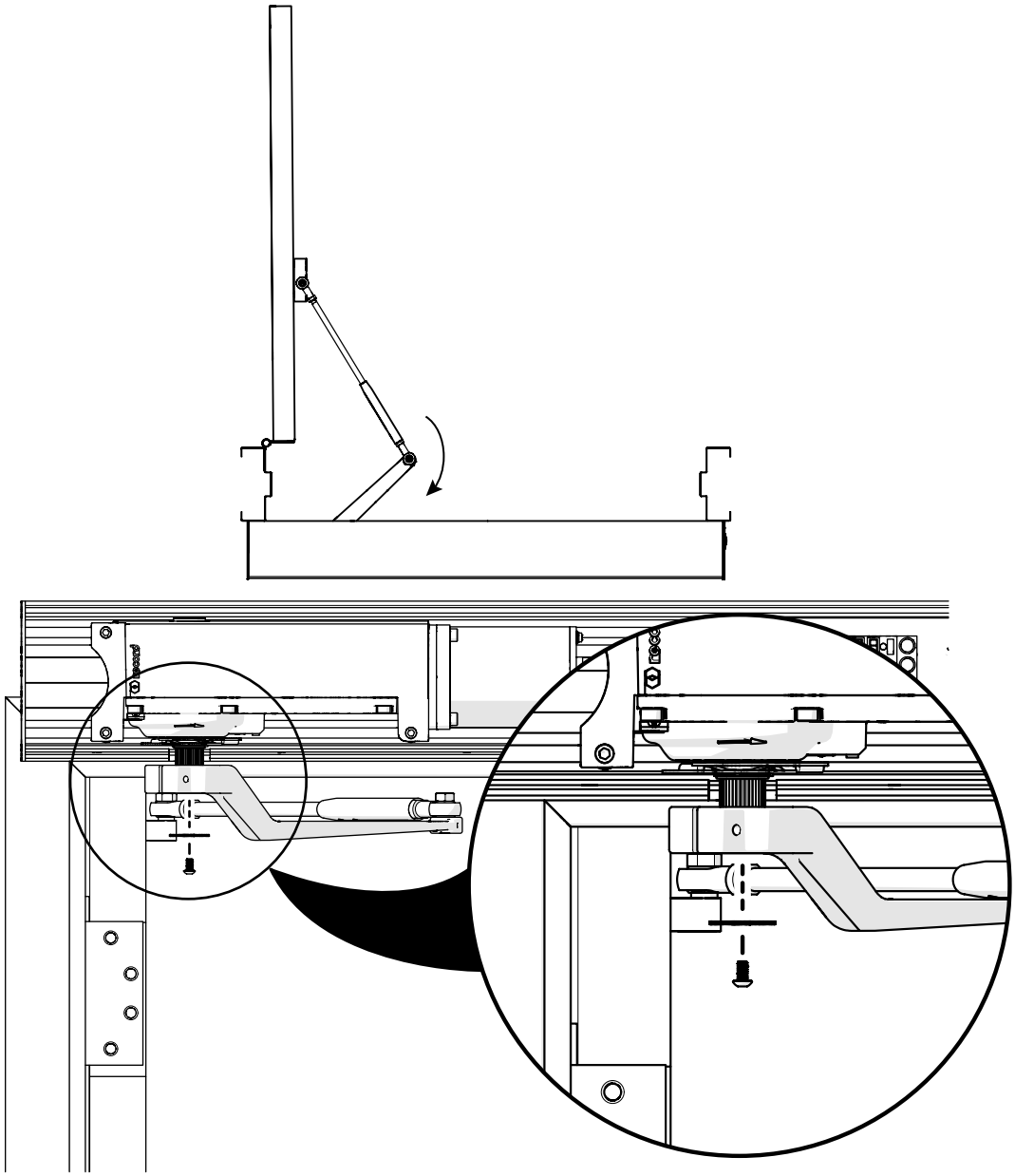

NOTICE

If necessary, loosen the set screws on the sleeve for minor adjustments and then tighten them again.

16. Set the operator switch to Off and allow the door to close under spring pressure. After it has closed, set the operator switch to Automatic, test the operation, and perform adjustments as needed.

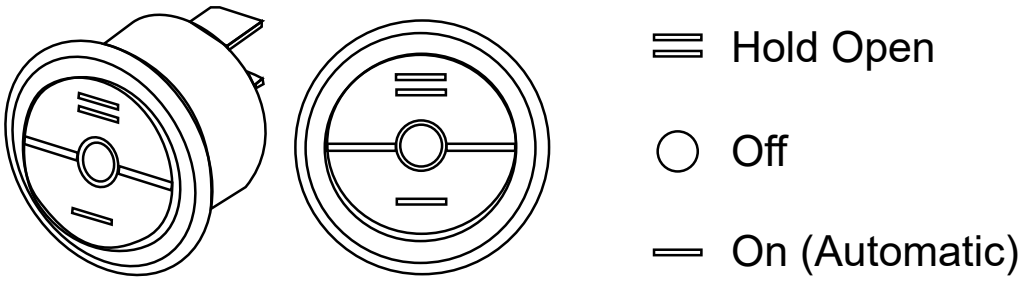

17. Ensure that the shoe bolts, the arm screw, and the rod and sleeve bolts are tight.

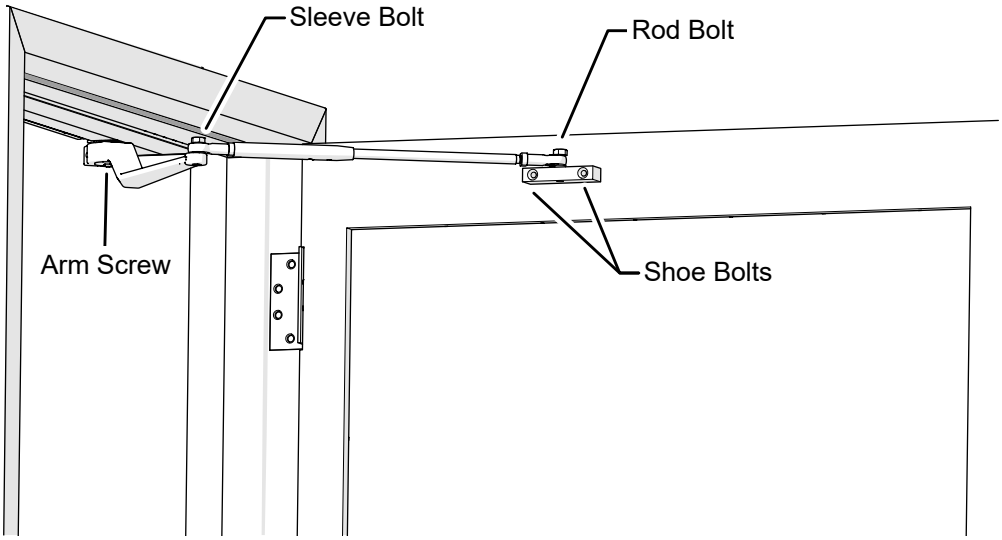

7.1.2 Alternate Configuration

The Alternate Configuration provides more clearance for the sleeve and rod because it is mounted below the Main Arm. Use this configuration when the clearance between the Rod/Door shoe and the top jamb (or any other obstruction in the swing path) prevents the Standard Configuration from being properly installed.

This option provides approximately 1 inch (25mm) of more of vertical space. This option is also beneficial for double-egress headers where there is a pull arm and a push arm installed with the same header.

NOTICE

Note that the rod is above the door shoe when installed so that if the bolt ever loosens, it will not fall out. If the door rail you are attaching to has a thinner horizontal top rail, the door shoe can be reversed and mounted above the rod end if space permits.

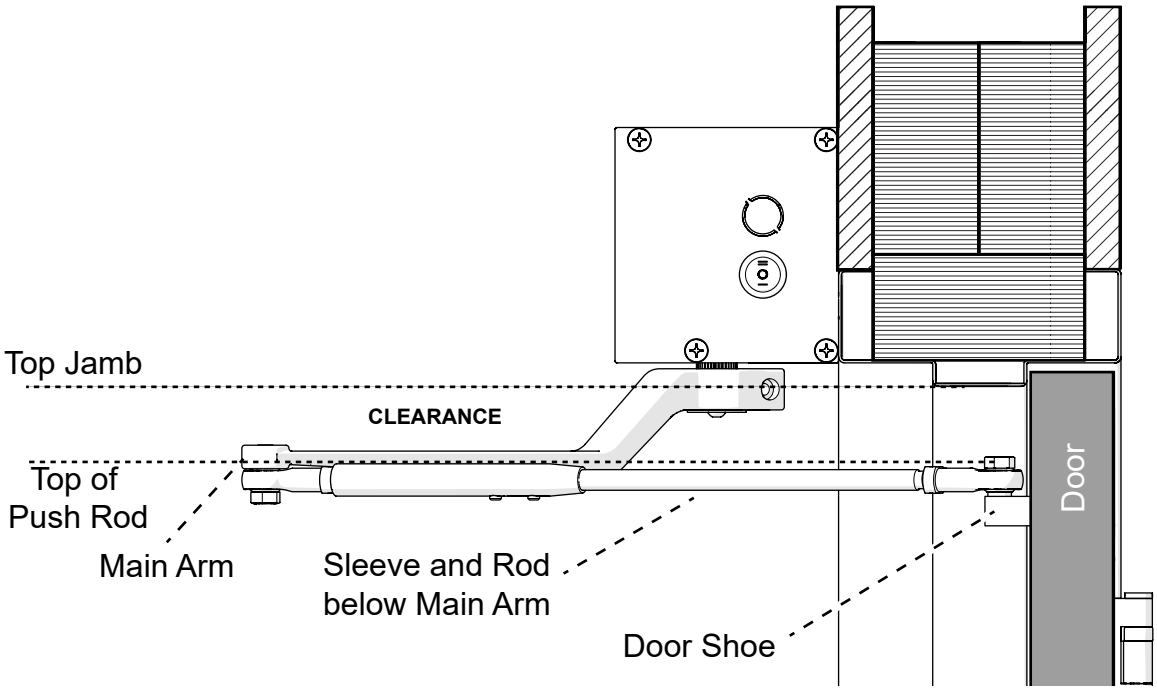

1. With the door in the open position, measure down 3 1/4” from the top of the door. Then measure 14 inches and 16 1/4” from the hinge side of the door. Mark these positions as the first and second holes for the door shoe fasteners.

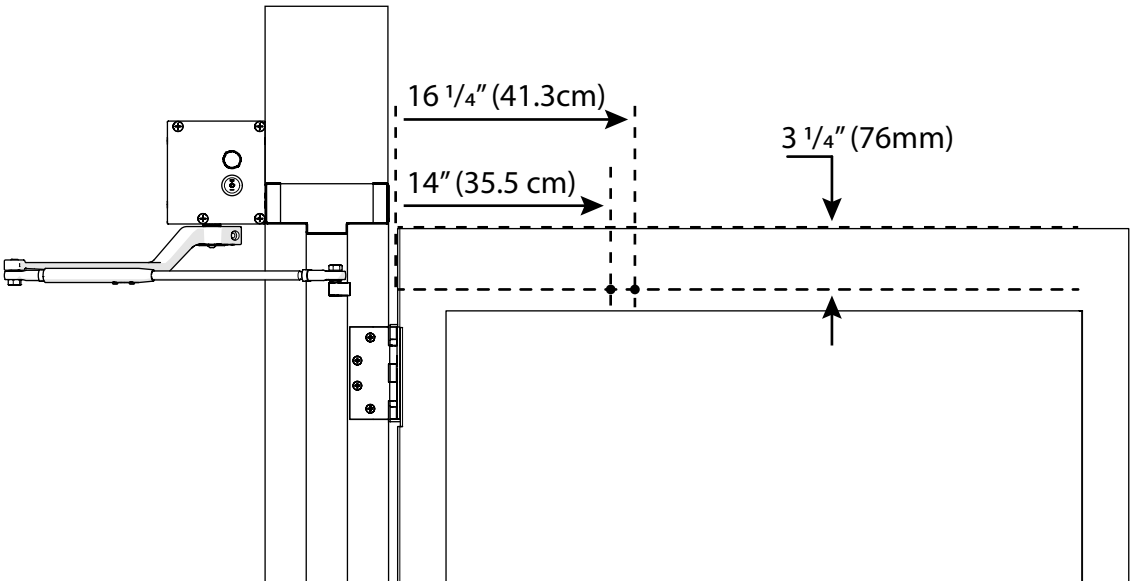

2. Using the appropriate hardware for the door type, mount the door shoe to the door.

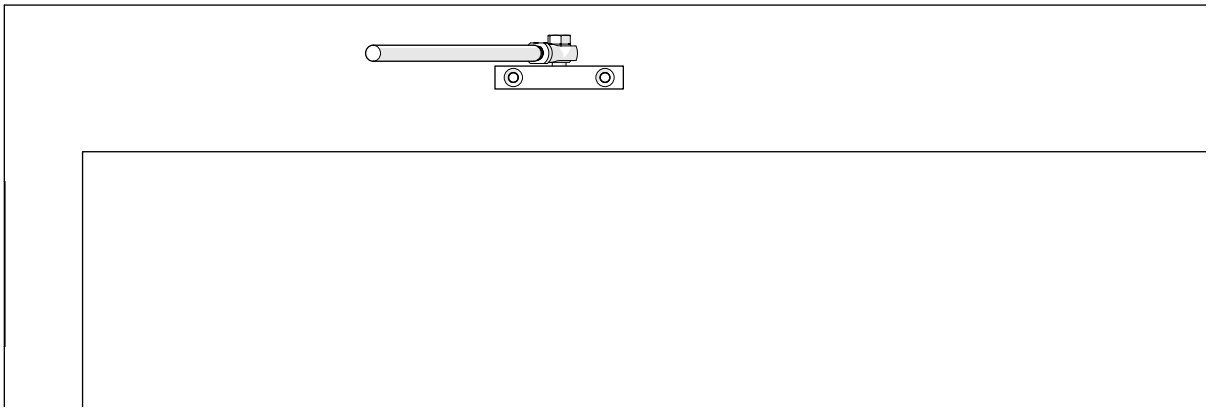

3. If necessary, install the rod to the door shoe using the included M10x30 hex cap screw and washer.

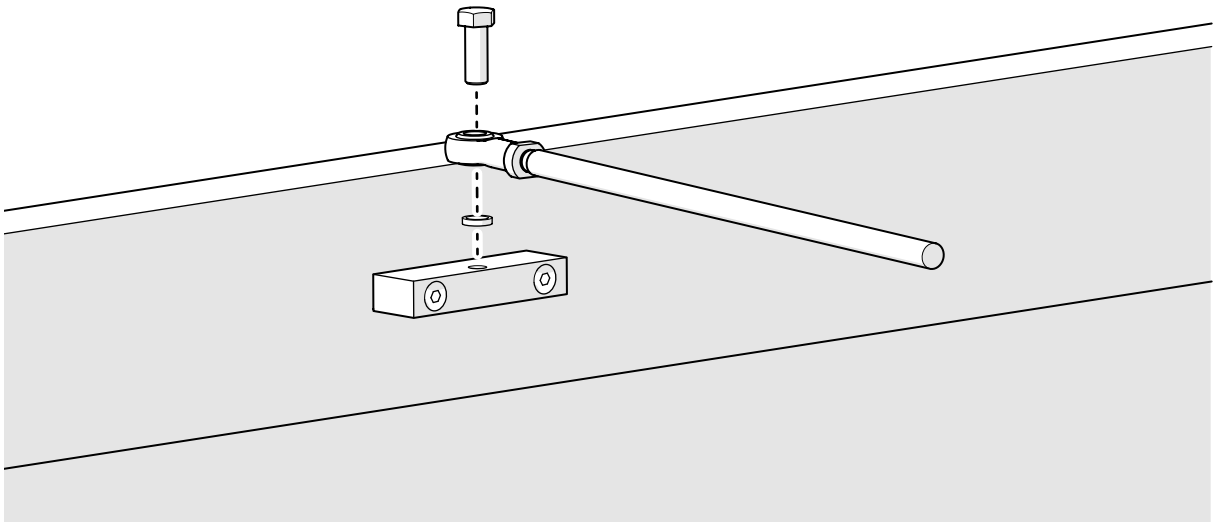

4. Align the main arm to approximately 80 degrees from the face of the door and push it over the splines on the spindle.

View from Top

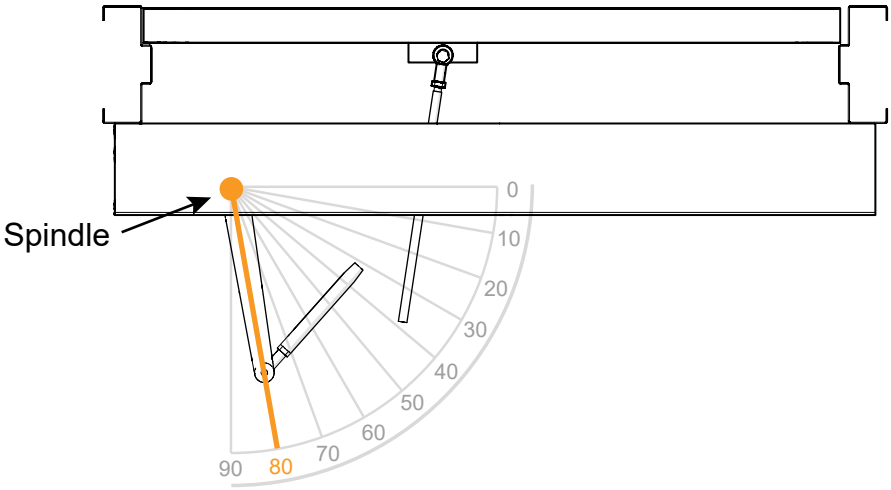

5. Secure the main arm to the spindle with the included screw and washer.

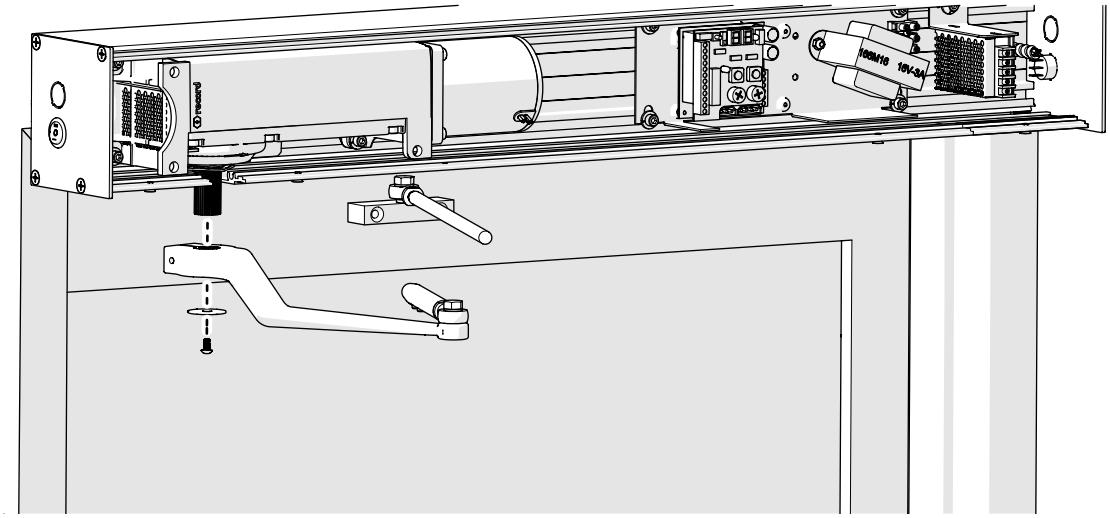

6. With the door closed, align the rod and the sleeve and then mark the rod at 1 inch from the second set screw.

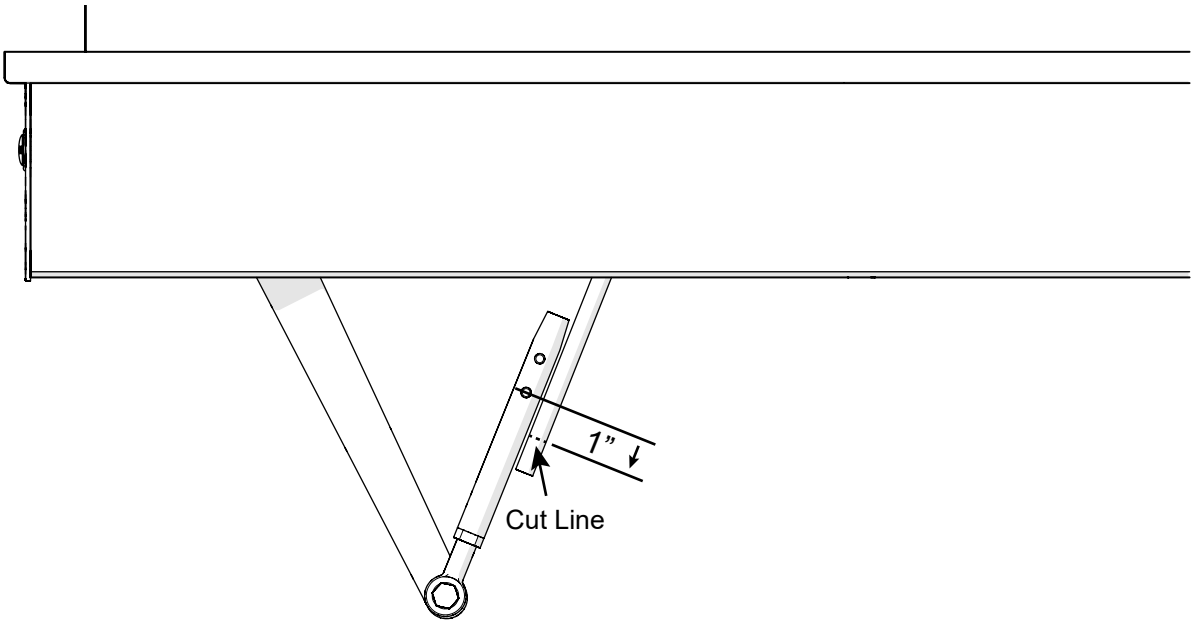

7. Cut the rod to size.

8. With the door slightly open, insert the rod into the sleeve until it bottoms out in the sleeve. Then, tighten both M6x6mm flat point socket set screws.

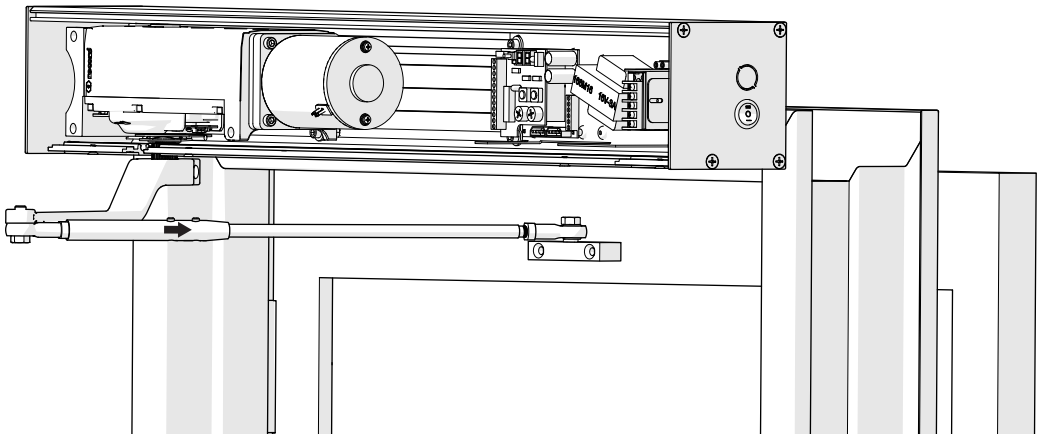

9. Loosen and remove the screw and washer securing the main arm to the spindle and remove the main arm.

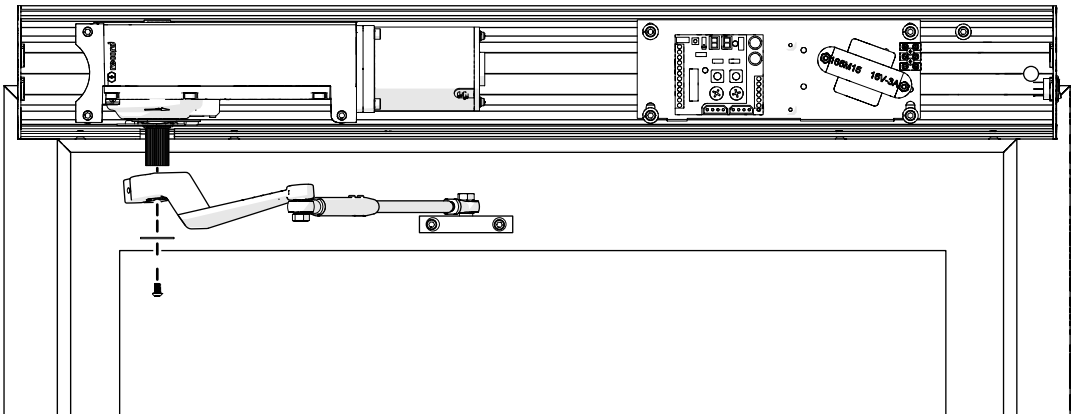

10. Disconnect the Reed Switch connector from the control unit.

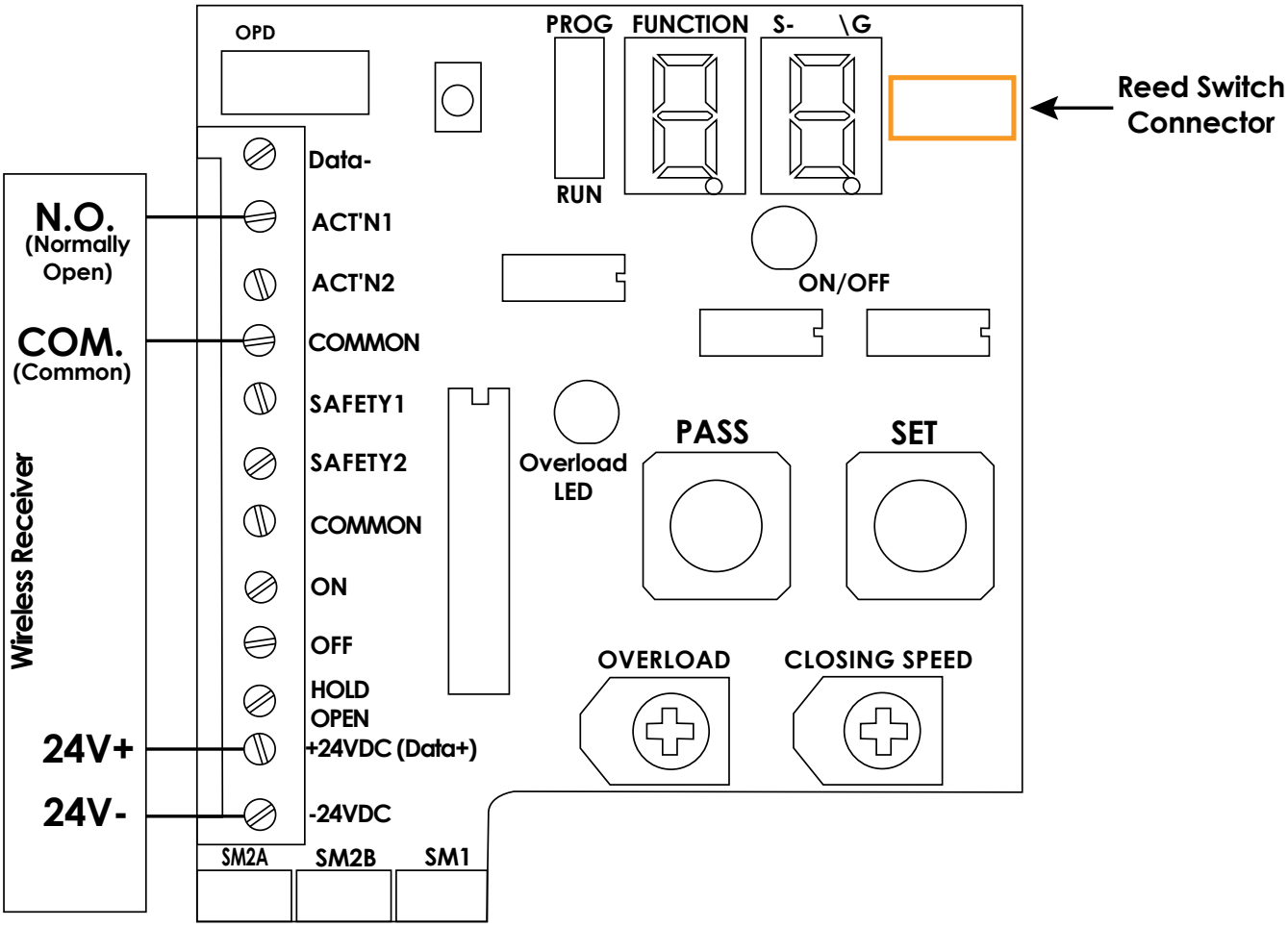

11. Set the Operator Switch on the header to Hold Open.

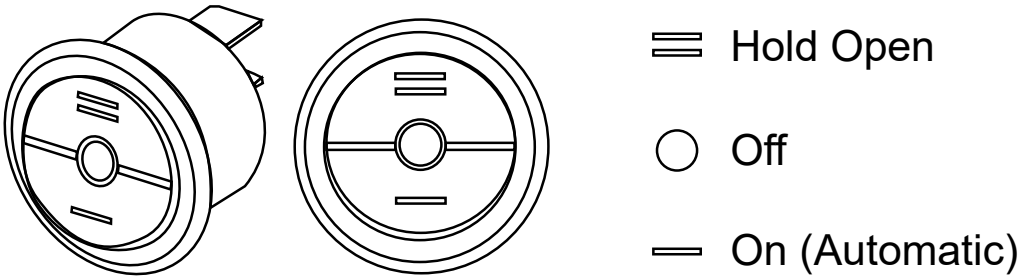

NOTICE

The spindle will turn until it reaches the built-in spline stop.

12. Reconnect the Reed Switch connector to the control unit.

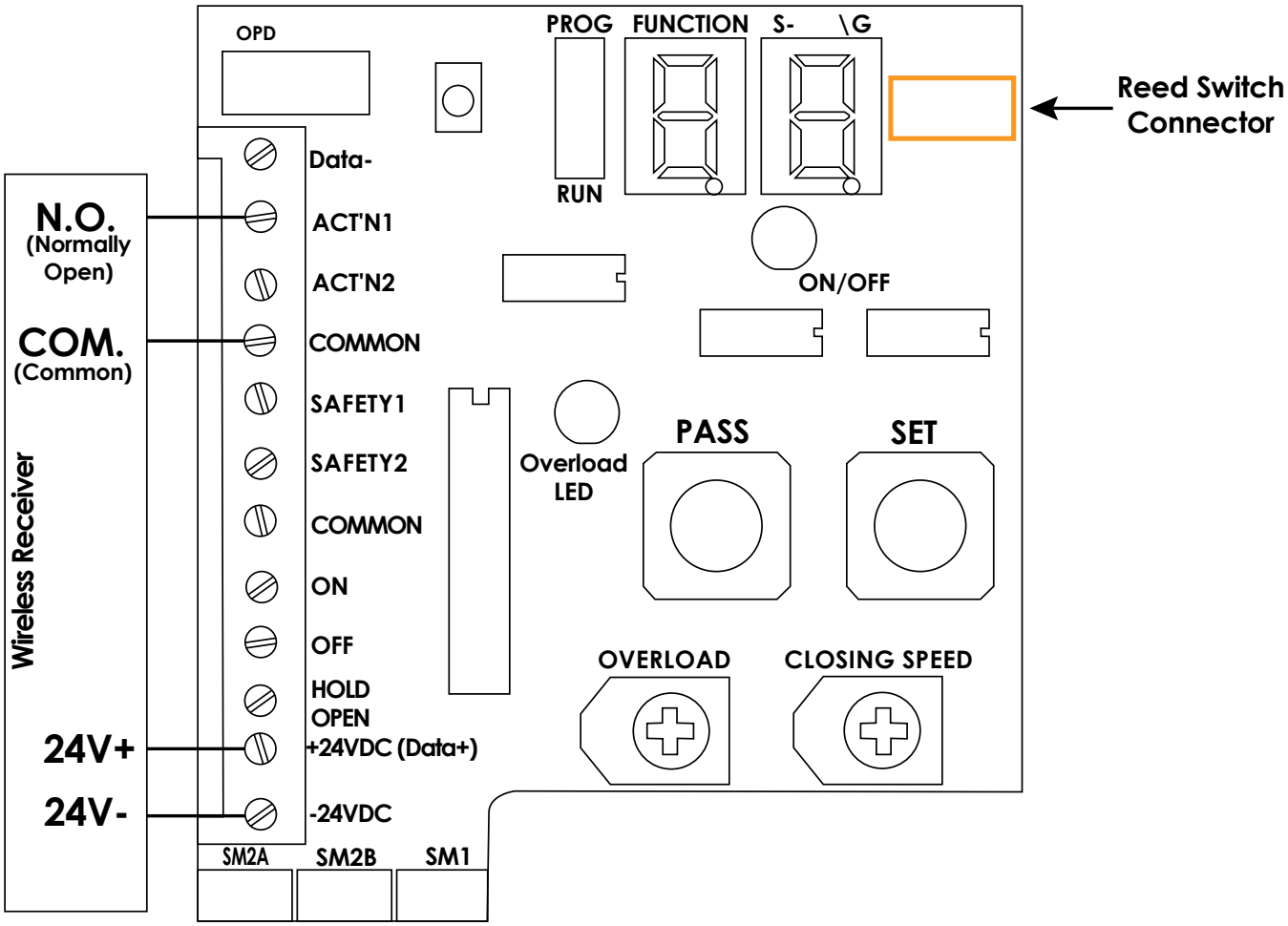

13. To prevent the spindle from oscillating back and forth, use a small flat head screwdriver to rotate the lower limit switch on the operator until the Back Check Magnet is towards the Back Check (B.C.) marks on the housing.

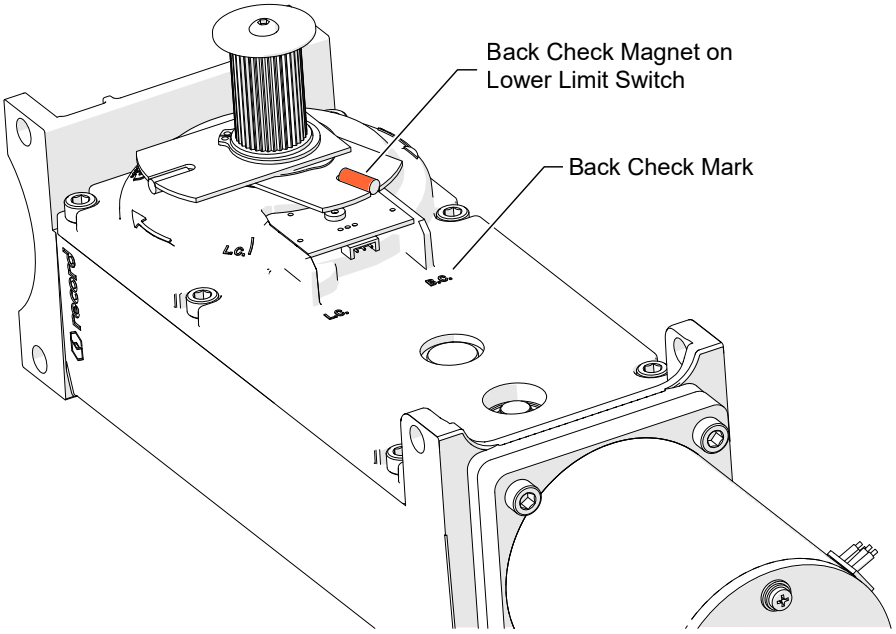

NOTICE

This can be accomplished with the operator still installed in the header.

NOTICE

This is not the final Back Check setting. After the physical installation has been completed, Back Check and Latch Check must be set again. Please refer to chapter called Operator Tuning.

14. Manually open the door to its fully-opened position..

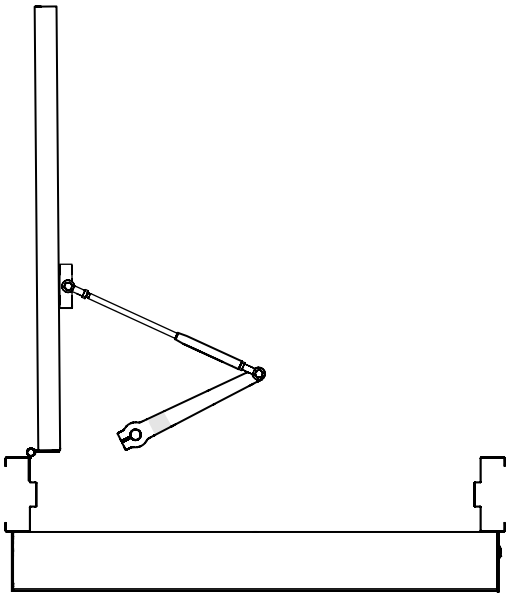

15. Once the operator motor has stopped turning the spindle, and with the door fully open, attach the Main Arm to the spindle and secure it with the original washer and screw. Also tighten the M8x25mm Socket Cap Screw that secures the main arm to the spindle.

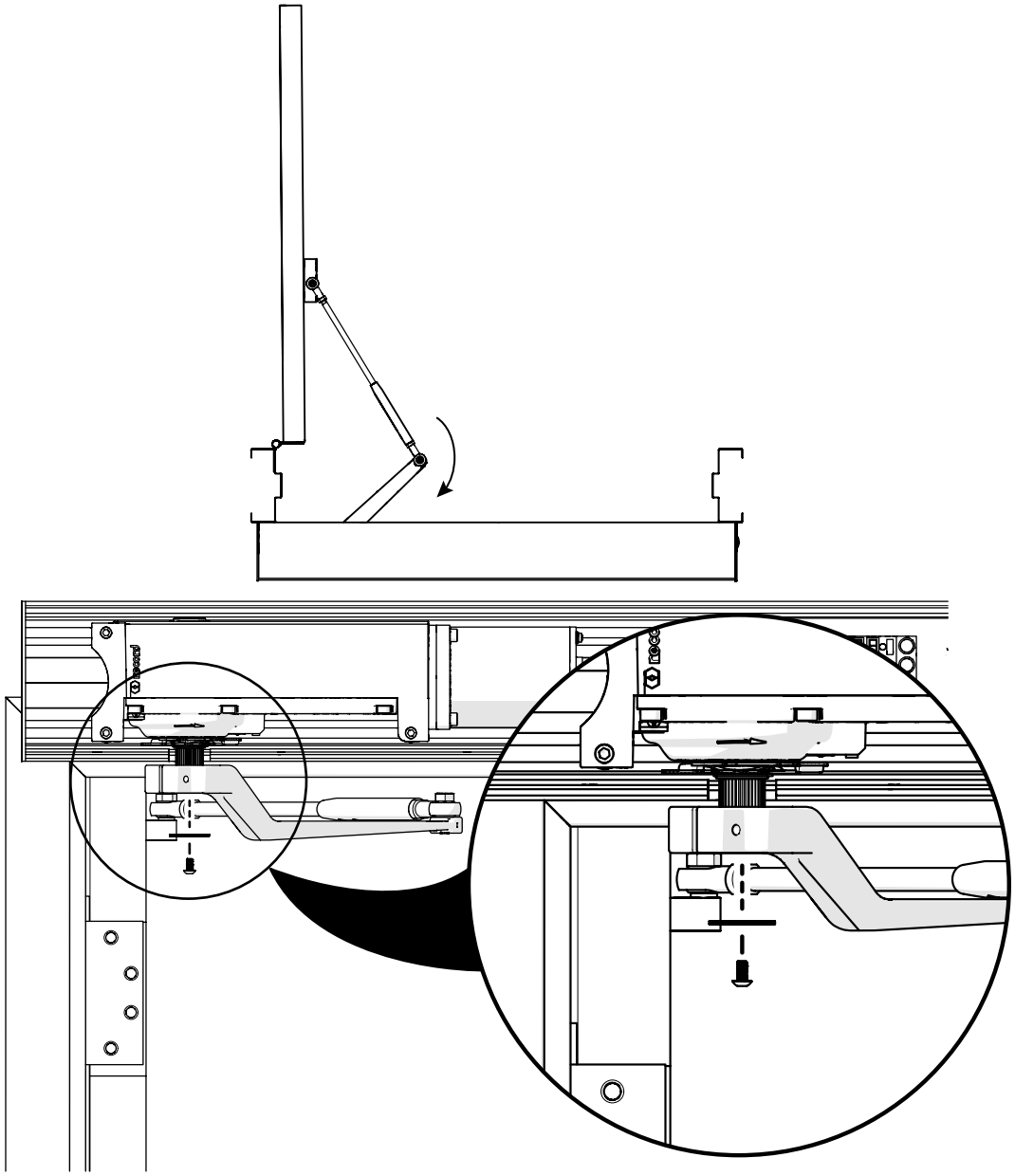

16. Set the operator switch to Off and allow the door to close under spring pressure. After it has closed, set the operator switch to Automatic, test the operation, and perform adjustments as needed.

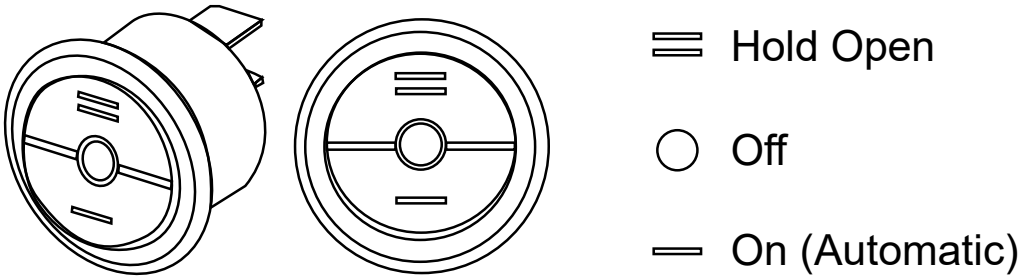

17. Ensure that the shoe bolts, the arm screw, and the rod and sleeve bolts are tight.

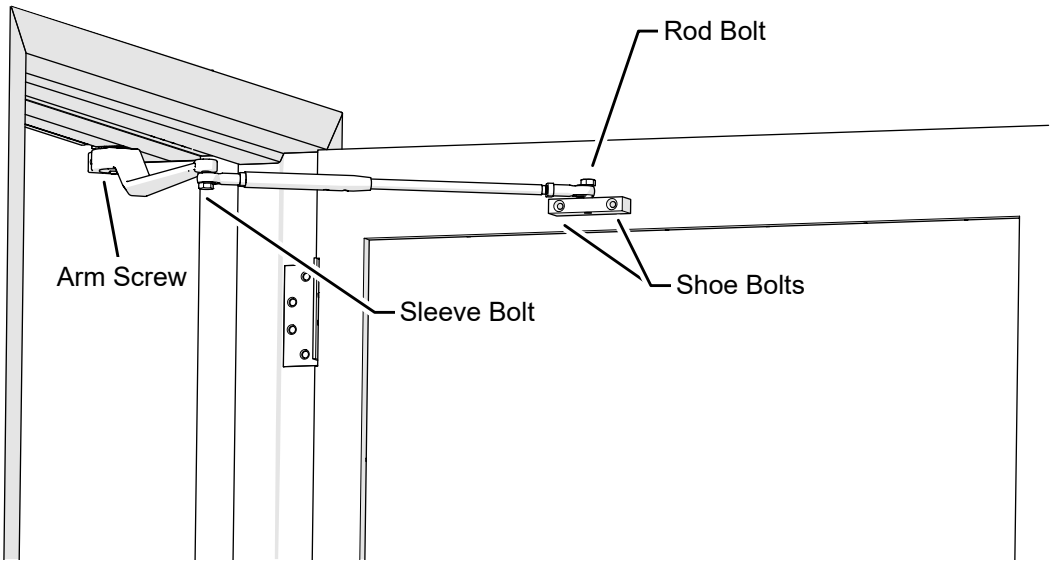

7.2 Pull Arm Components and Configurations

The arm can be used as both a Push and a Pull arm to provide the flexibility to mount the header to either side of the door opening.

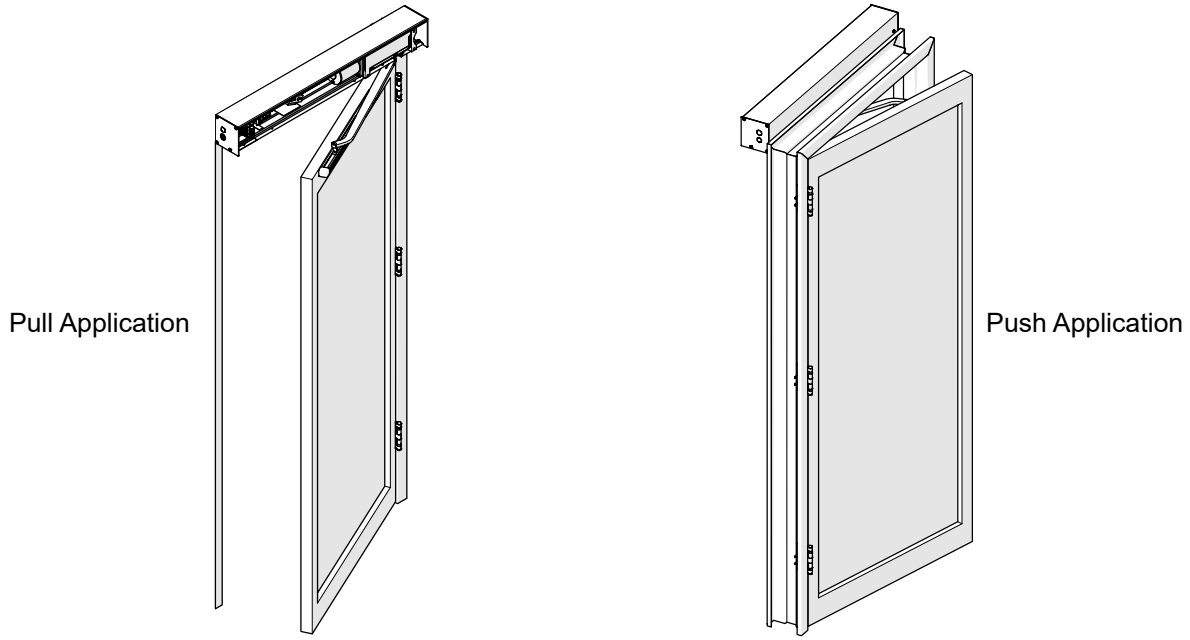

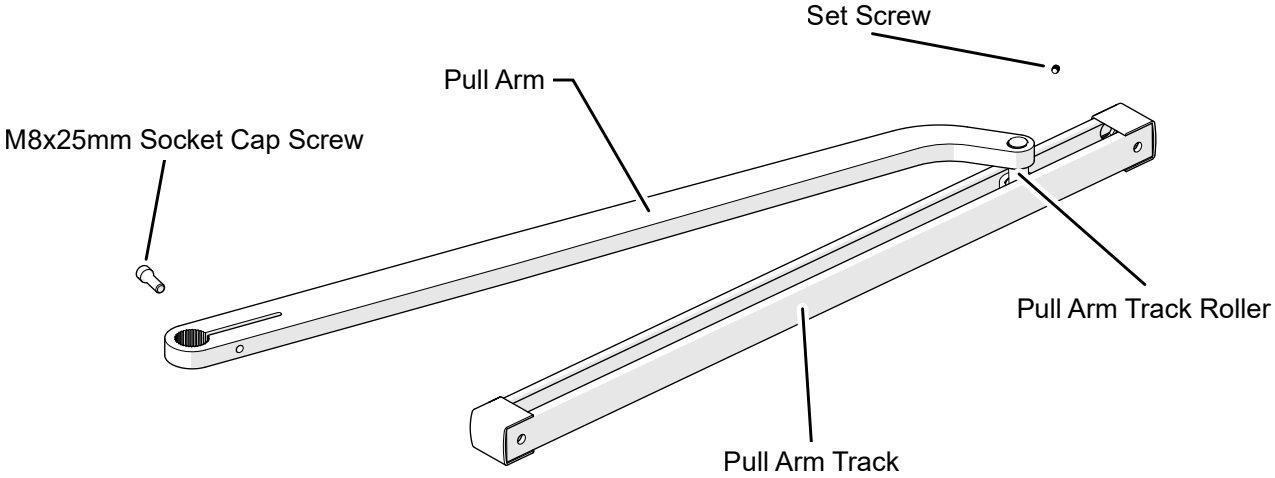

For push applications, the bottom of the header must be flush with the door stop to ensure that the arm clears the frame during the swing cycle. For pull applications, the spindle must clear the top of the door and the header is installed 1 3/8” (35mm) above the lower part of the upper door frame.

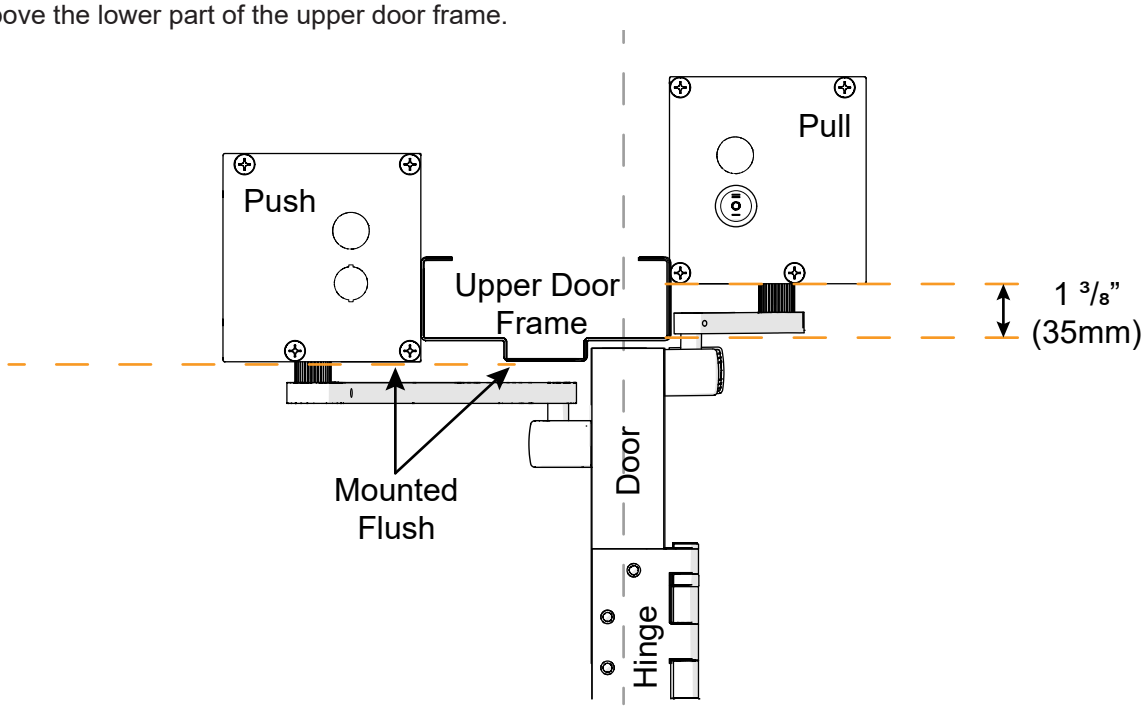

7.2.1 Pull Arm Installation

1. Insert the roller shaft into the pull arm and center the groove on the shaft with the set screw.

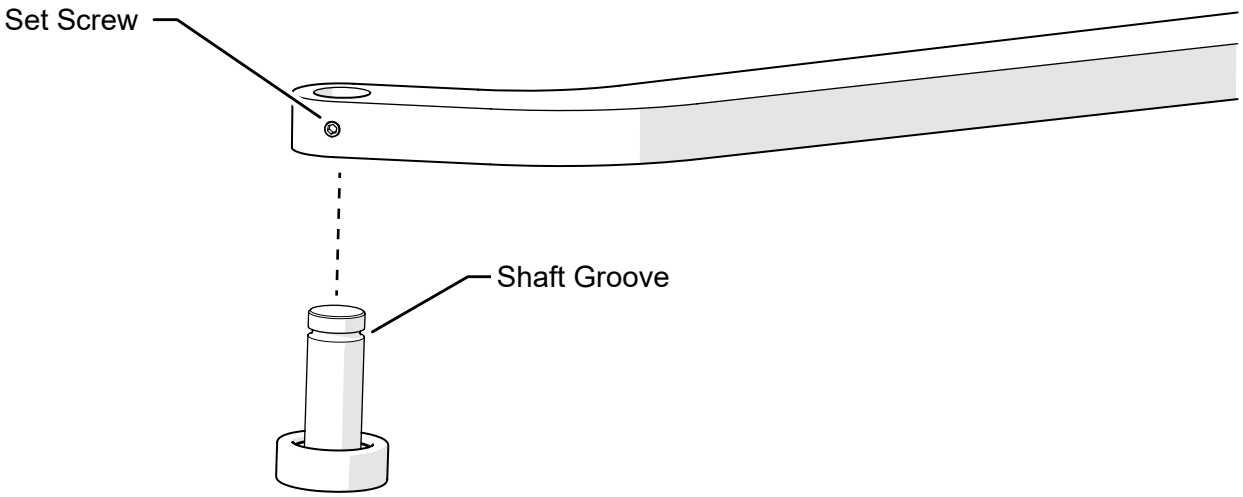

2. Tighten the set screw.

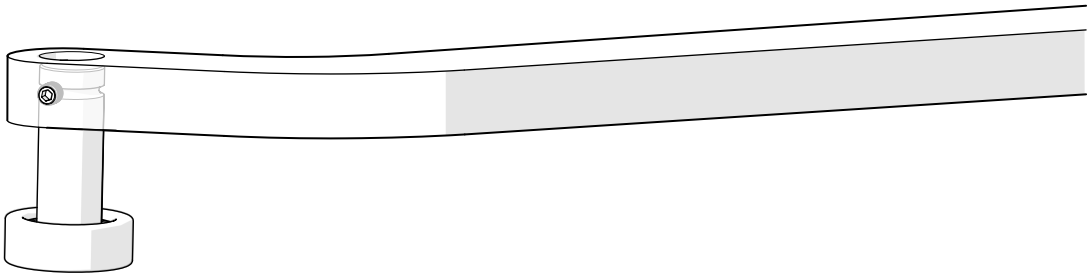

3. With the operator switch set to Off, fully close the door.

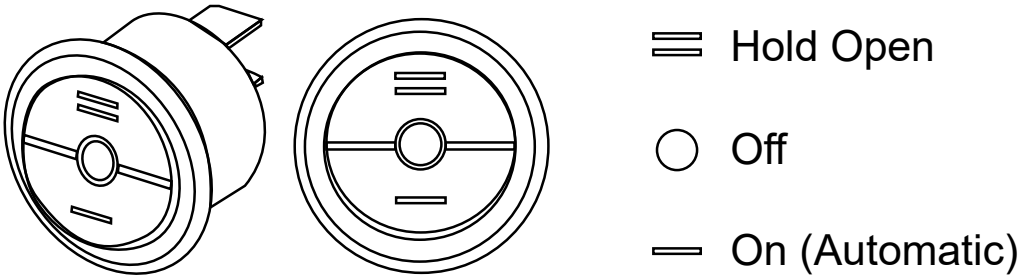

4. Position the pull arm on the spindle parallel to the door and mark the position on the door where the roller would touch the door. Then measure 1” (25mm) to the door handle side of the door and place another mark.

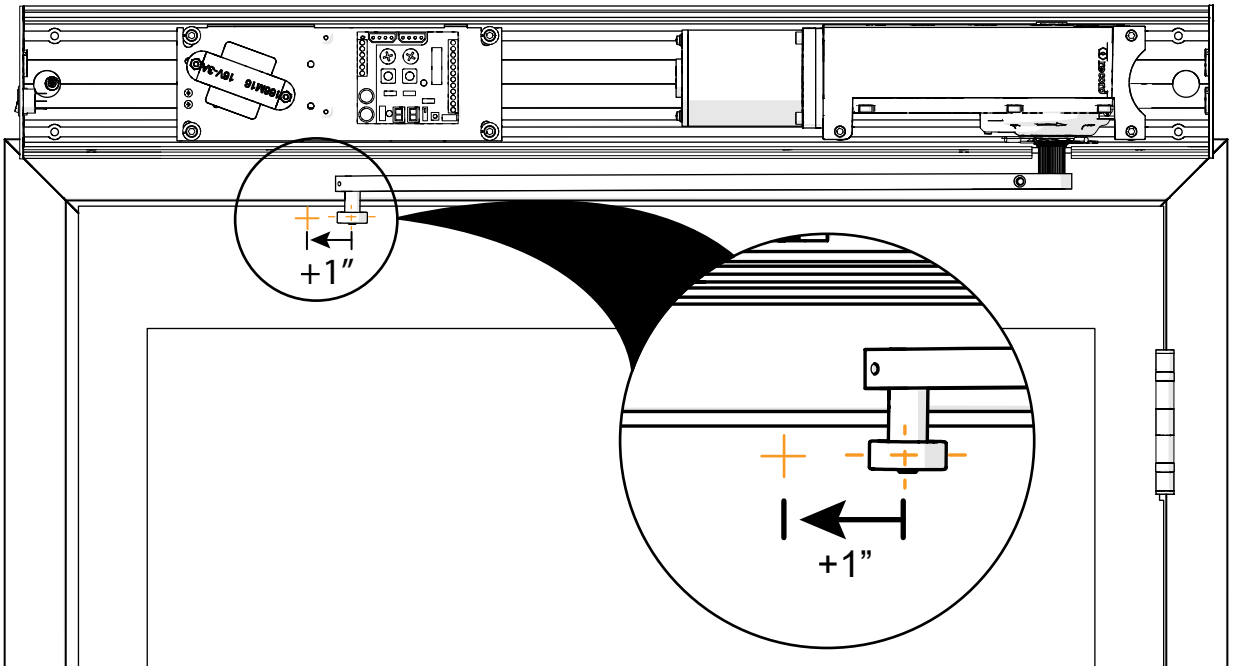

5. Remove the pull arm from the spindle.

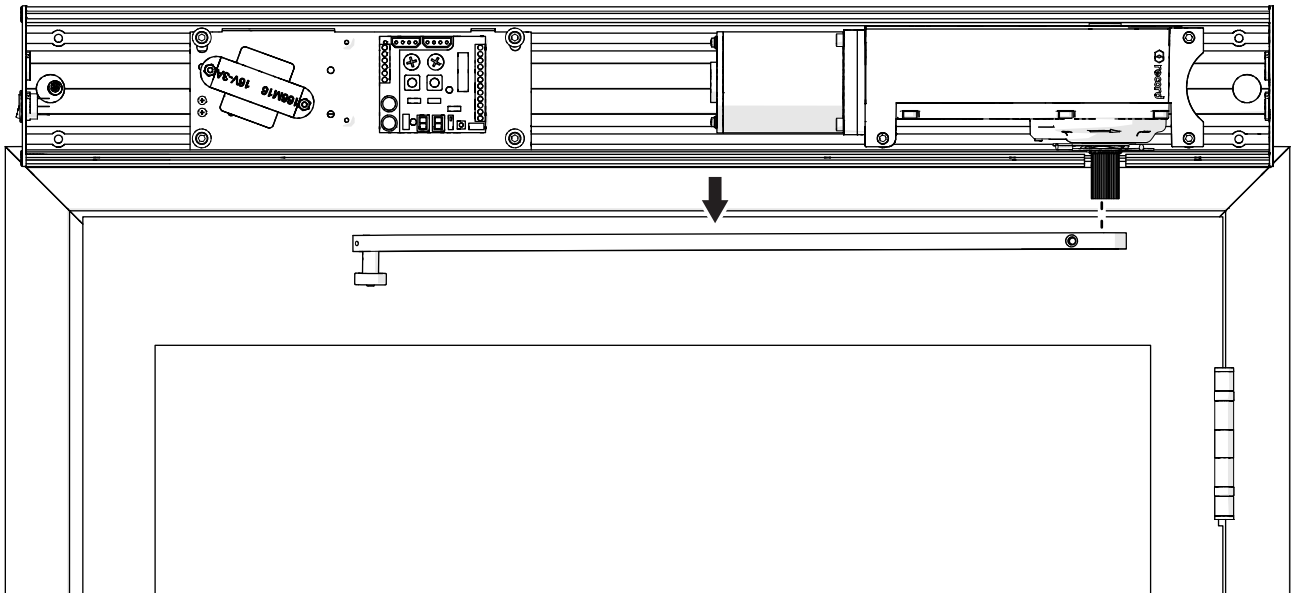

6. Disconnect the Reed Switch connector from the control unit.

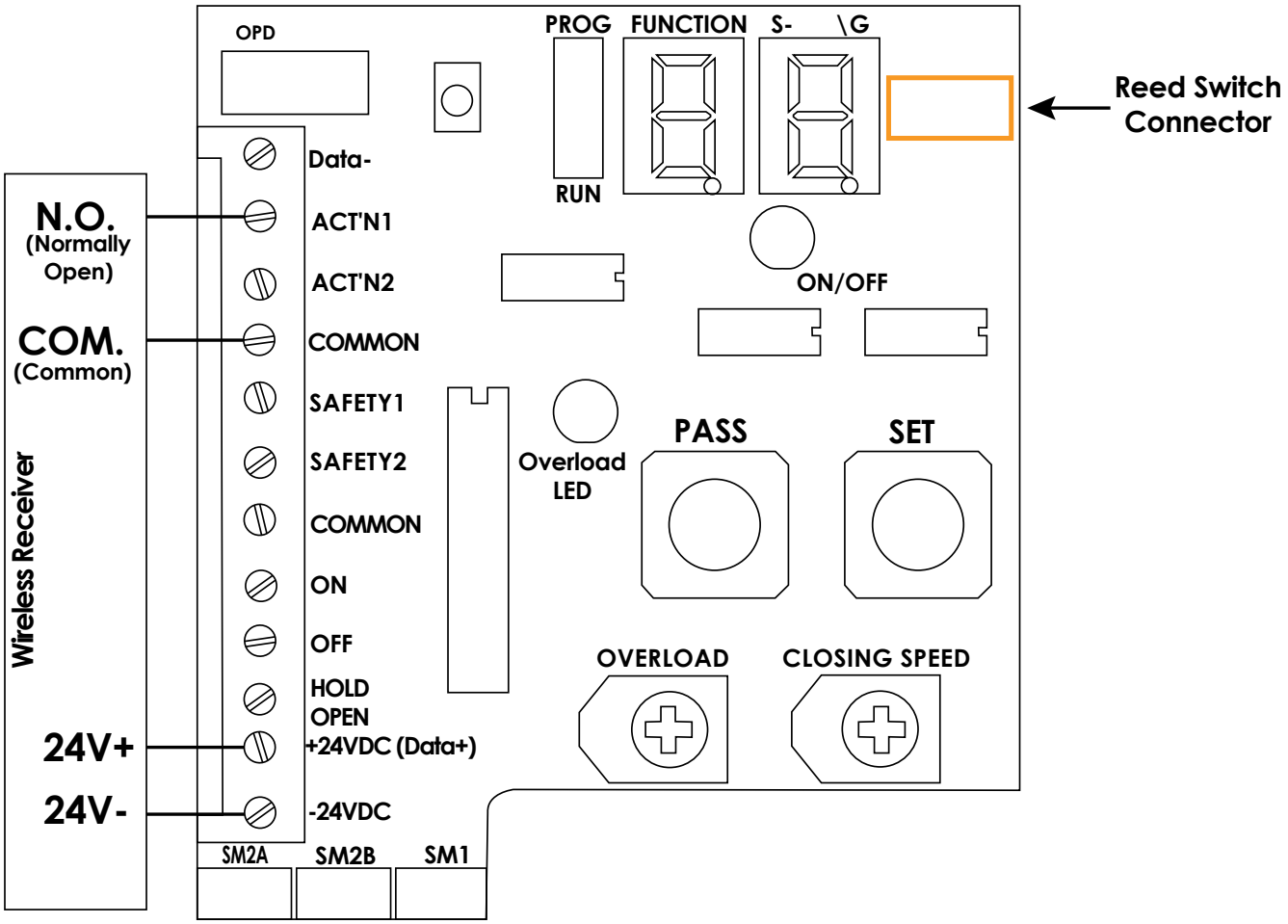

7. Set the Operator Switch on the header to Hold Open.

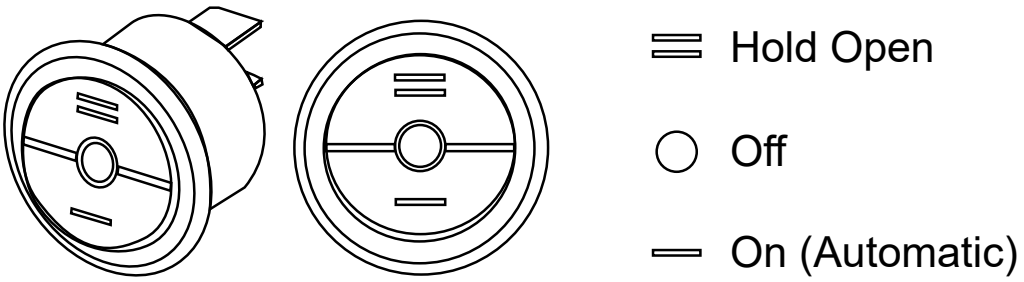

NOTICE

The spindle will turn until it reaches the built-in spline stop.

8. Reconnect the Reed Switch connector to the control unit.

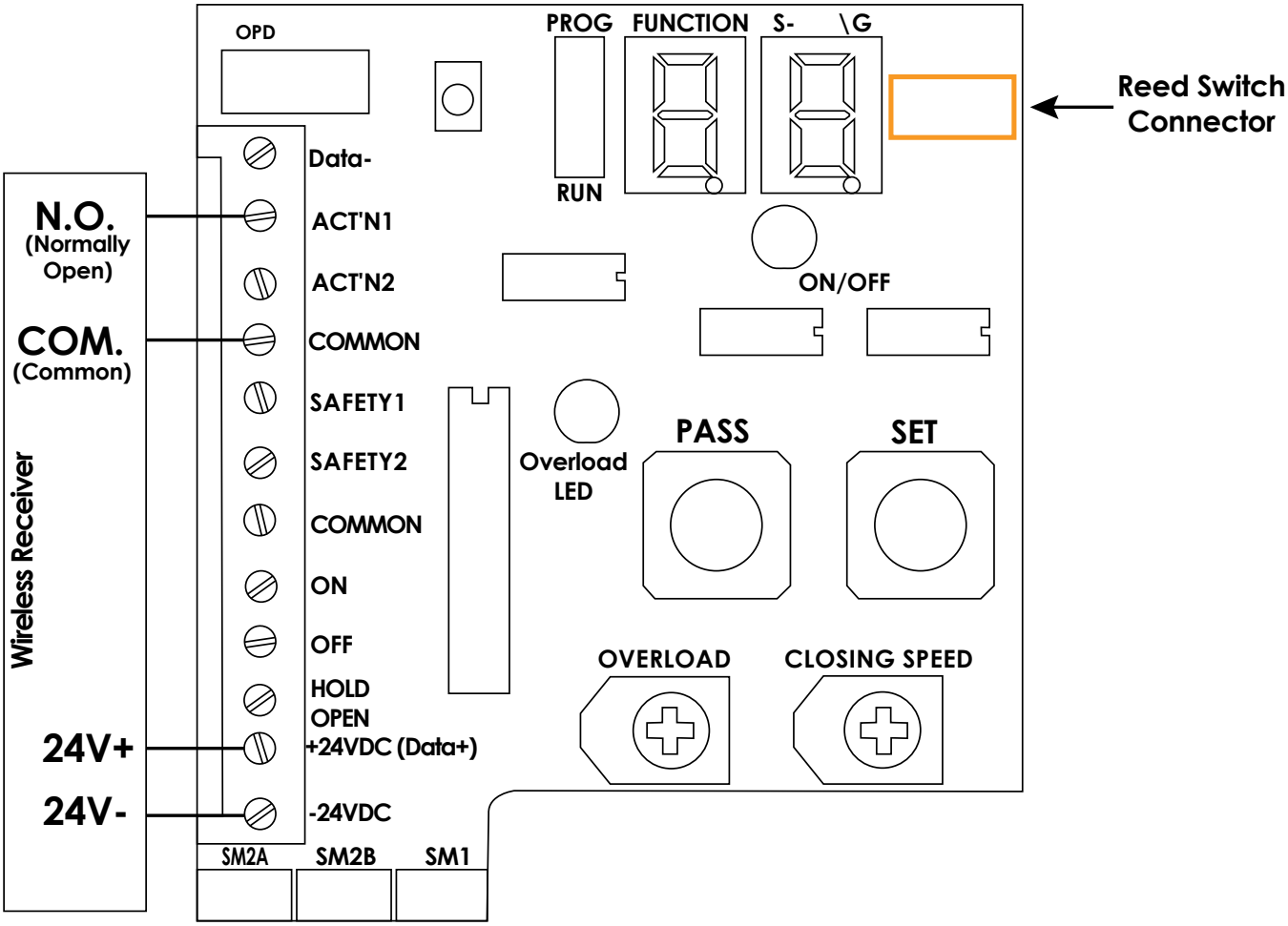

9. To prevent the spindle from oscillating back and forth, use a small flat head screwdriver to rotate the lower limit switch on the operator until the Back Check Magnet is pointing towards the Back Check (B.C.) mark on the housing.

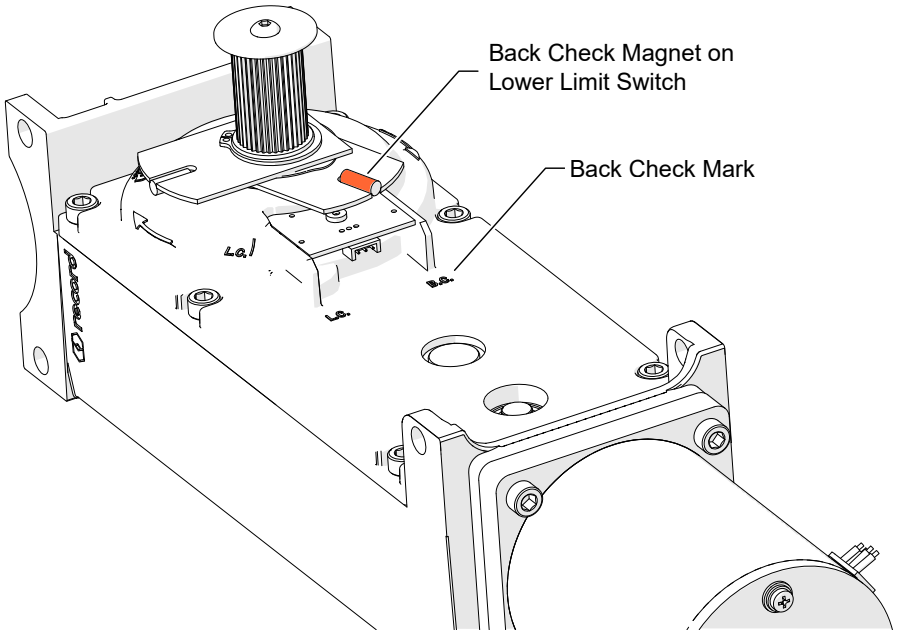

NOTICE

This can be accomplished with the operator still installed in the header.

NOTICE

This is not the final Back Check setting. After the physical installation has been completed, Back Check and Latch Check must be set again. Please refer to chapter called Operator Tuning.

10. Open the door to its fully-open position.

11. Set the operator switch to Hold Open.

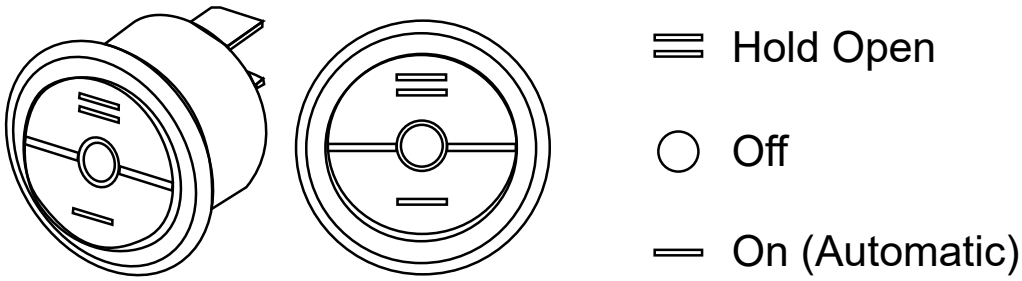

12. Place the pull arm on the spindle so that the roller touches the open door.

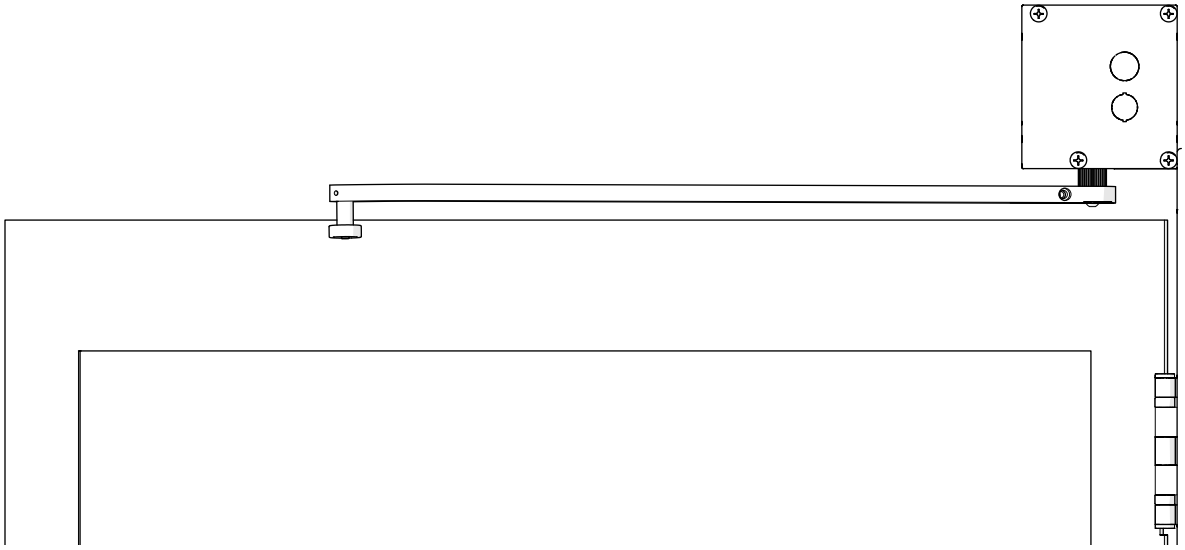

13. Mark the position where the roller touches the door and then tighten the M6x20mm socket cap screw to secure the pull arm to the spindle.

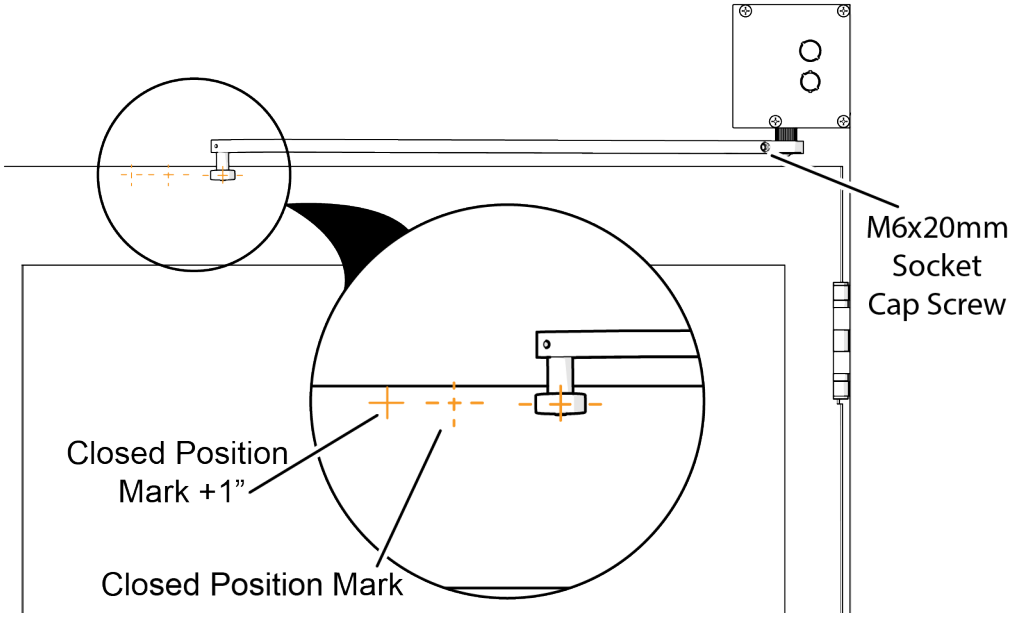

NOTICE

The open position and closed position marks illustrate the travel of the roller during the door swing cycle. In a pull configuration with the door opening at 90 degrees, these two (2) marks should only be a few inches apart. For openings larger than 90 degrees, the distance will increase.

14. Manually close the door.

15. Set the operator switch to Off.

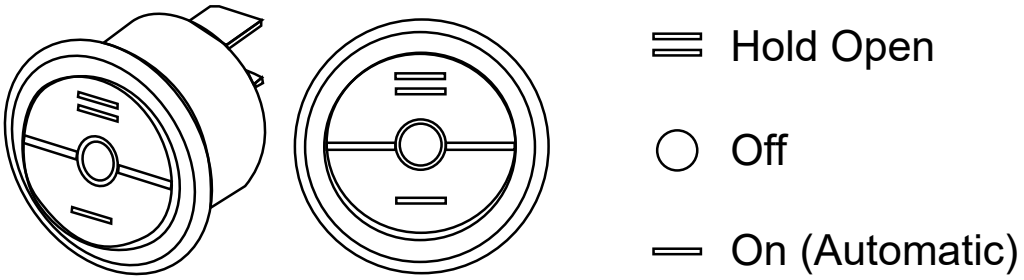

NOTICE

The spindle and arm will turn until the roller touches the door.

16. Remove the end caps from the pull track and position the roller into the track channel.

17. Level and then align the track to the door ensuring the track covers all three (3) marks, and so that the roller is aligned vertically in the track.

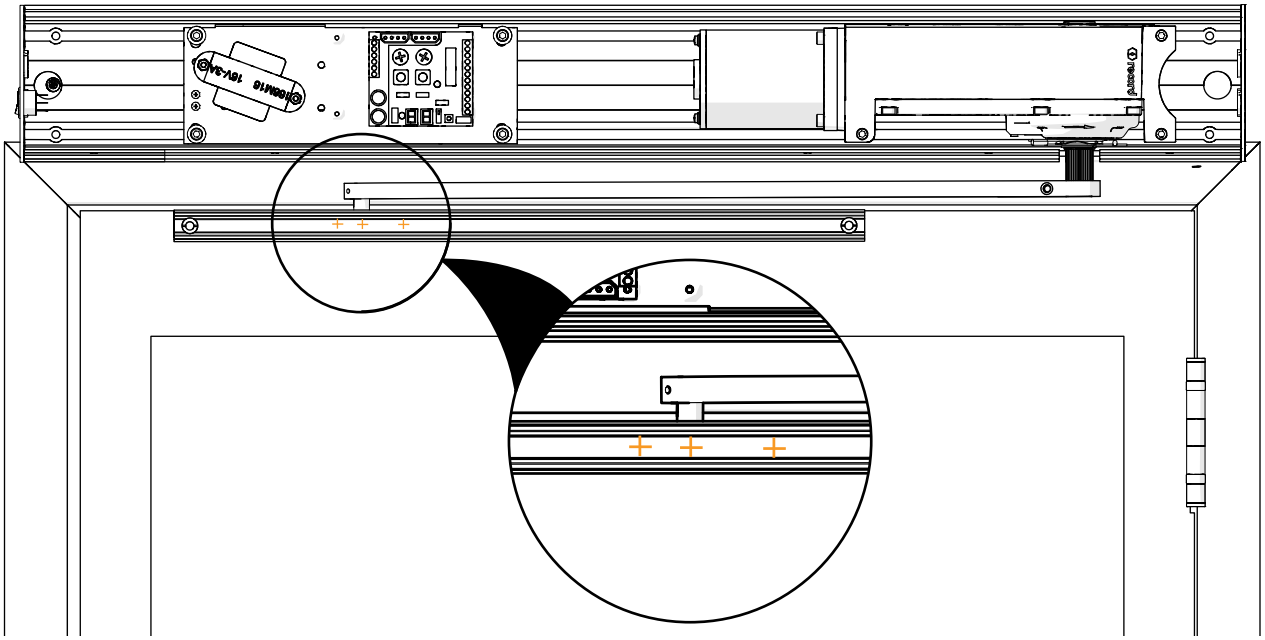

NOTICE

The track may be centered to the door as long as the three (3) marks are covered by the track.

NOTICE

The track must be positioned so that the larger holes face away from the door. The smaller holes should face the door.

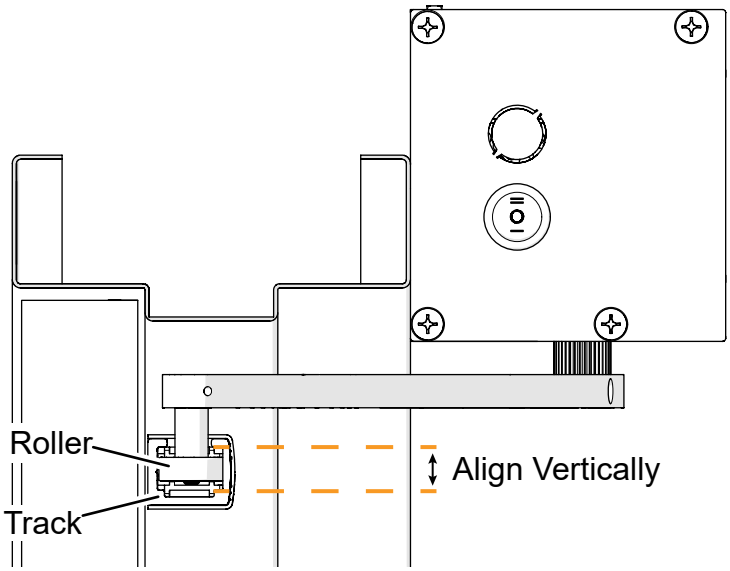

18. Mount the track to the door using the appropriate fasteners for the door type.

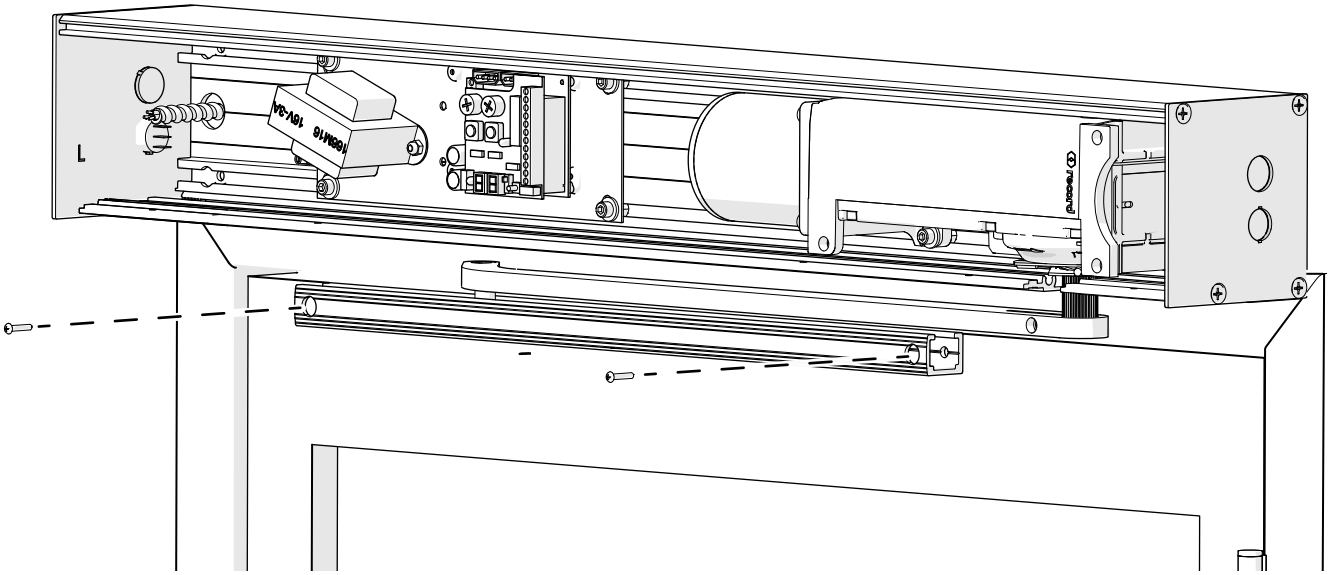

19. Install the end caps to the ends of the track.

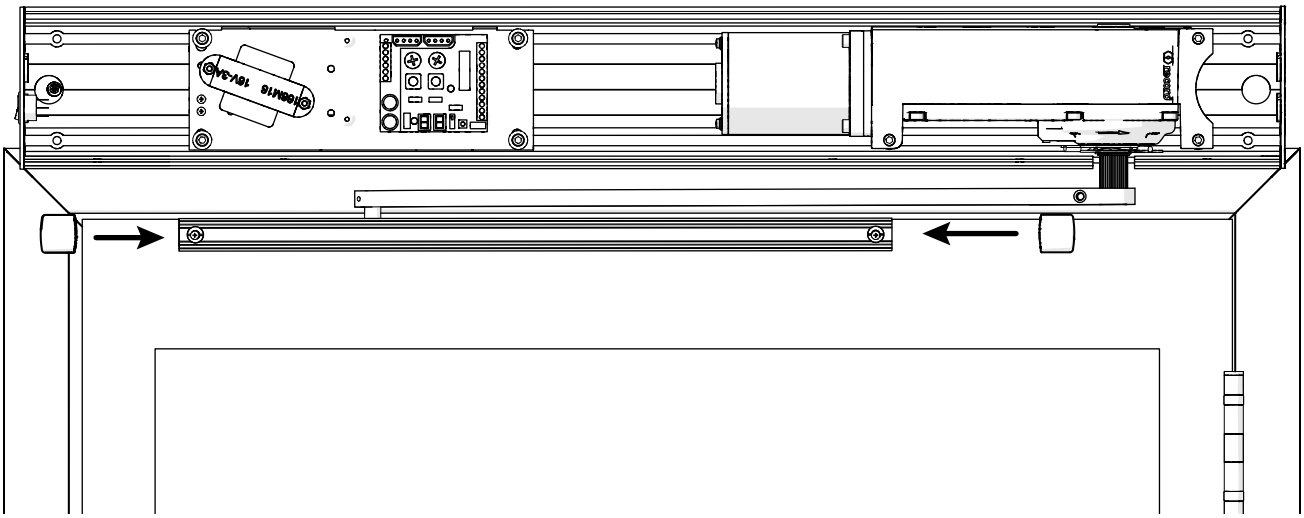

20. Set the operator switch to Automatic and test the operation.

7.2.2 Pull Arm as a Push Installation

When installing the Pull Arm as a push application, it is important that the bottom of the header is mounted in line with the bottom of the top jamb door stop. This will ensure that the arm has enough clearance when the door cycles.

1. Insert the roller shaft into the arm and center the groove on the shaft with the set screw.

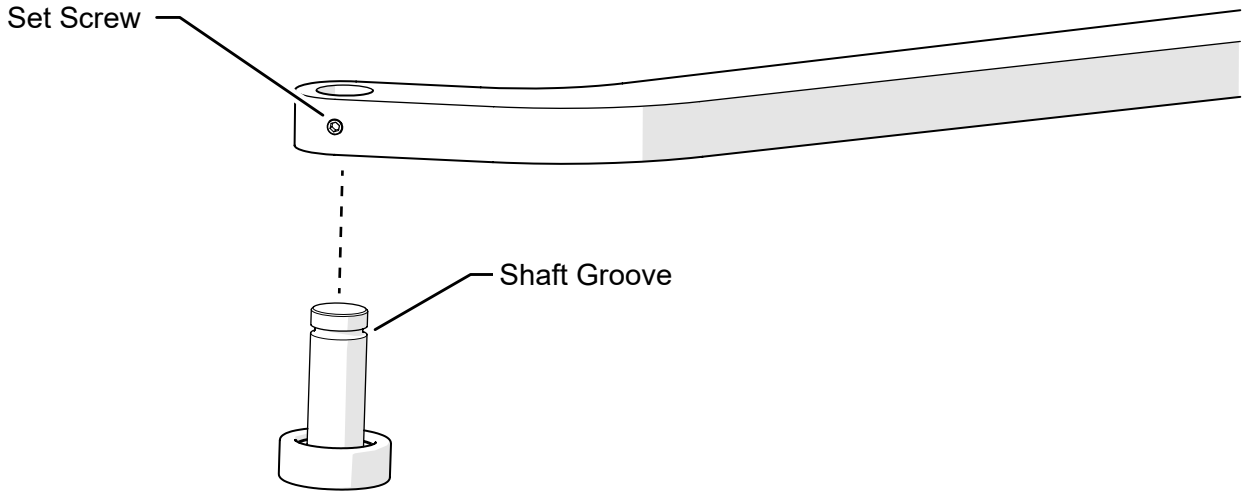

2. Tighten the set screw into the shaft groove.

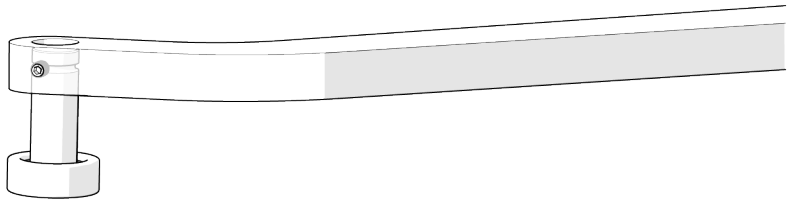

3. With the operator switch set to Off, fully close the door.

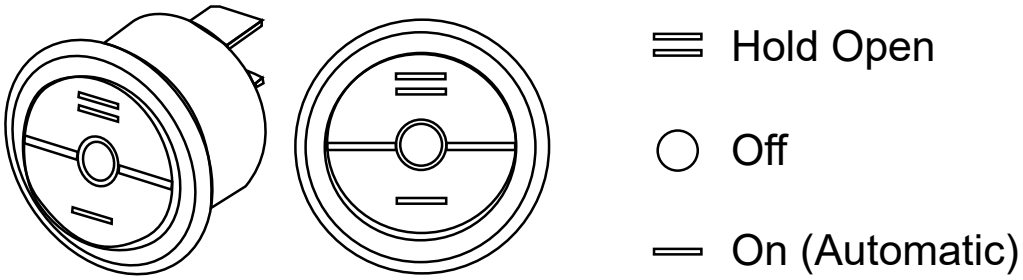

4. Position the arm on the spindle parallel to the door and mark the position on the door where the roller touches it.

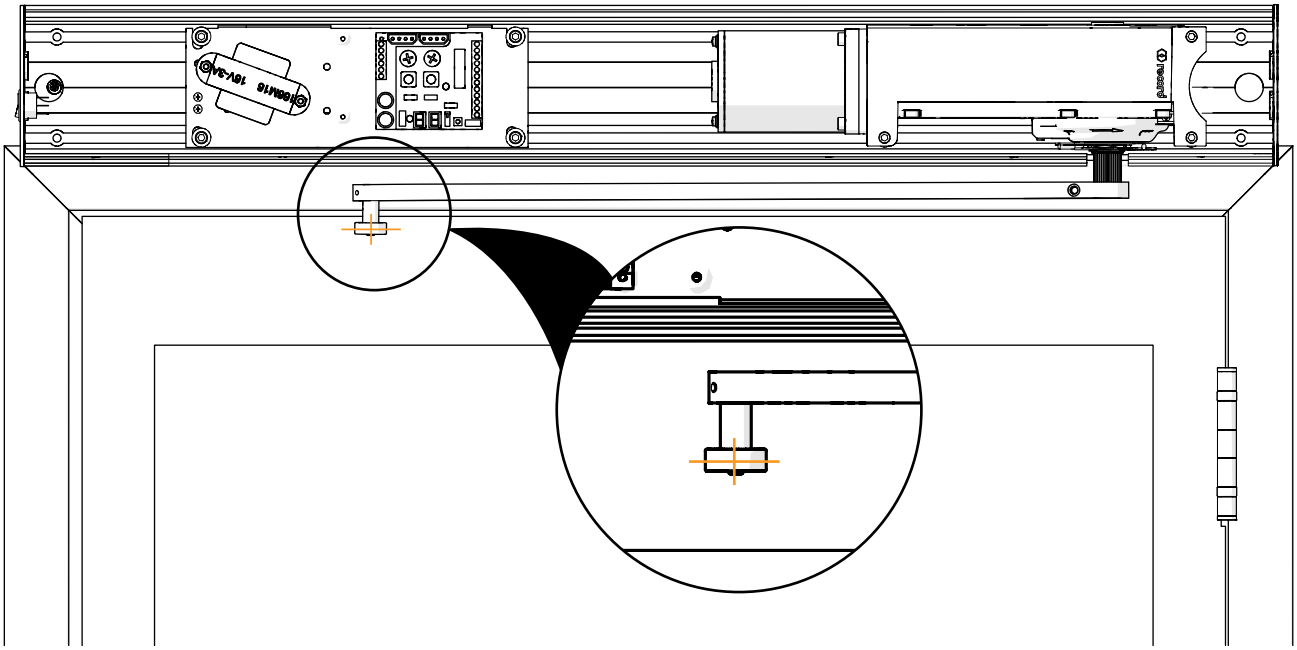

5. Remove the arm from the spindle.

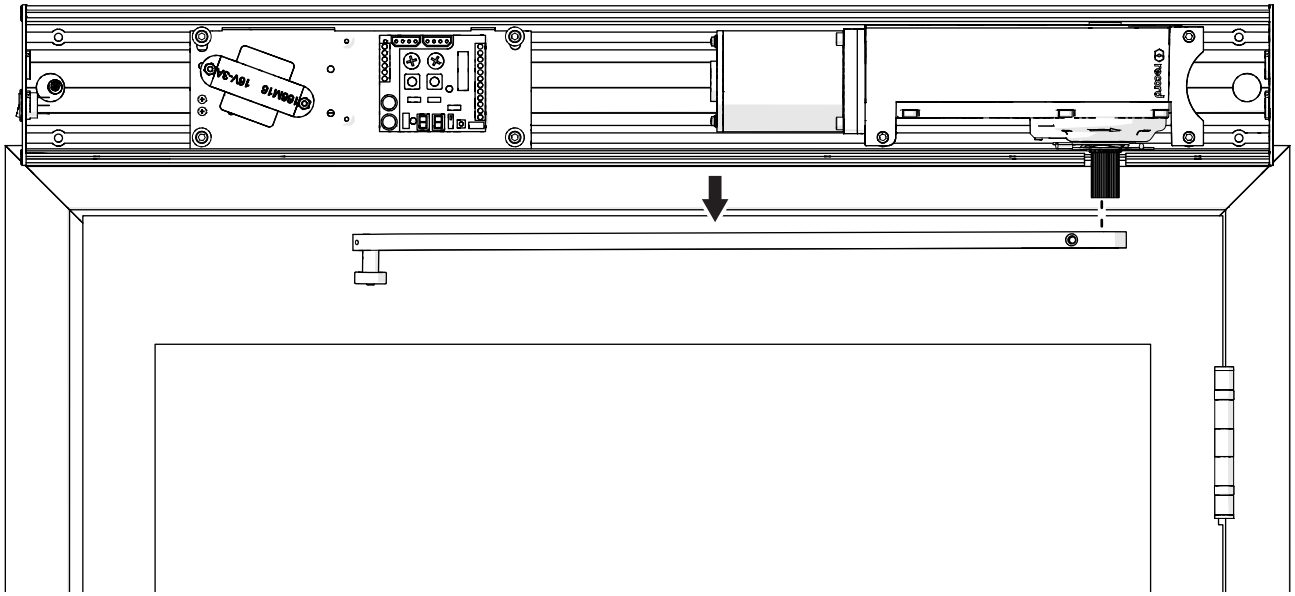

6. Disconnect the Reed Switch connector from the control unit.

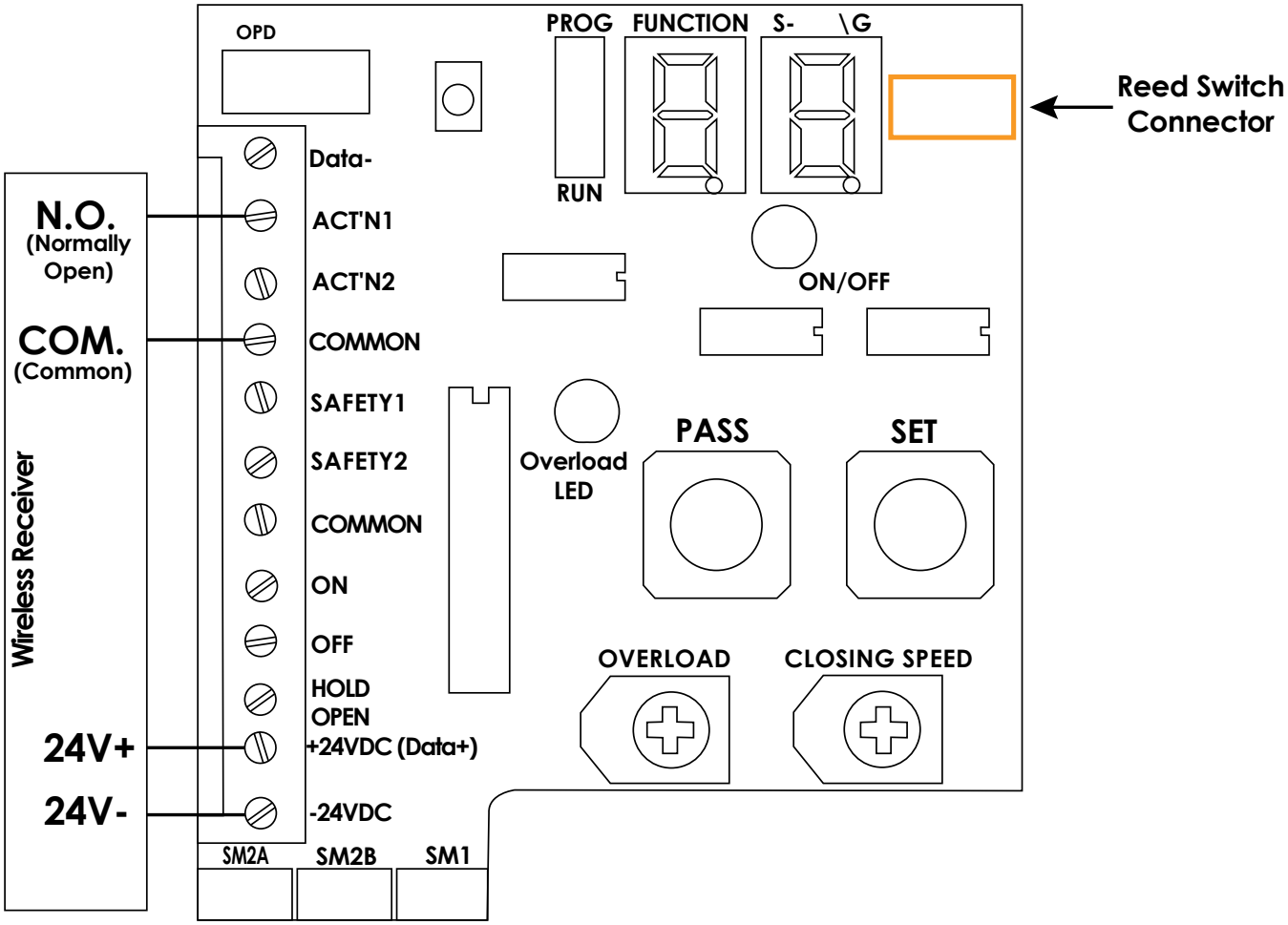

7. Set the Operator Switch on the header to Hold Open.

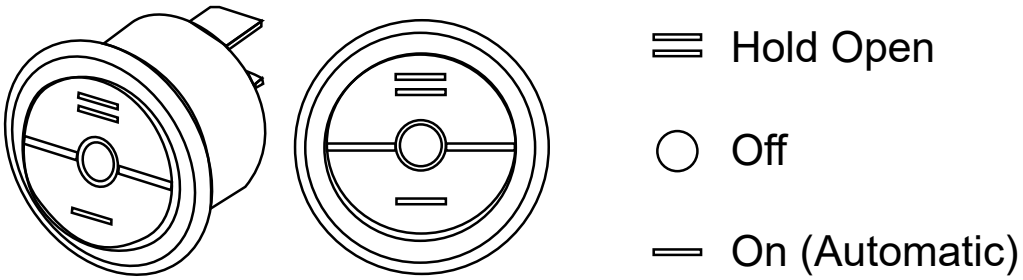

NOTICE

The spindle will turn until it reaches the built-in spline stop.

8. Reconnect the Reed Switch connector to the control unit.

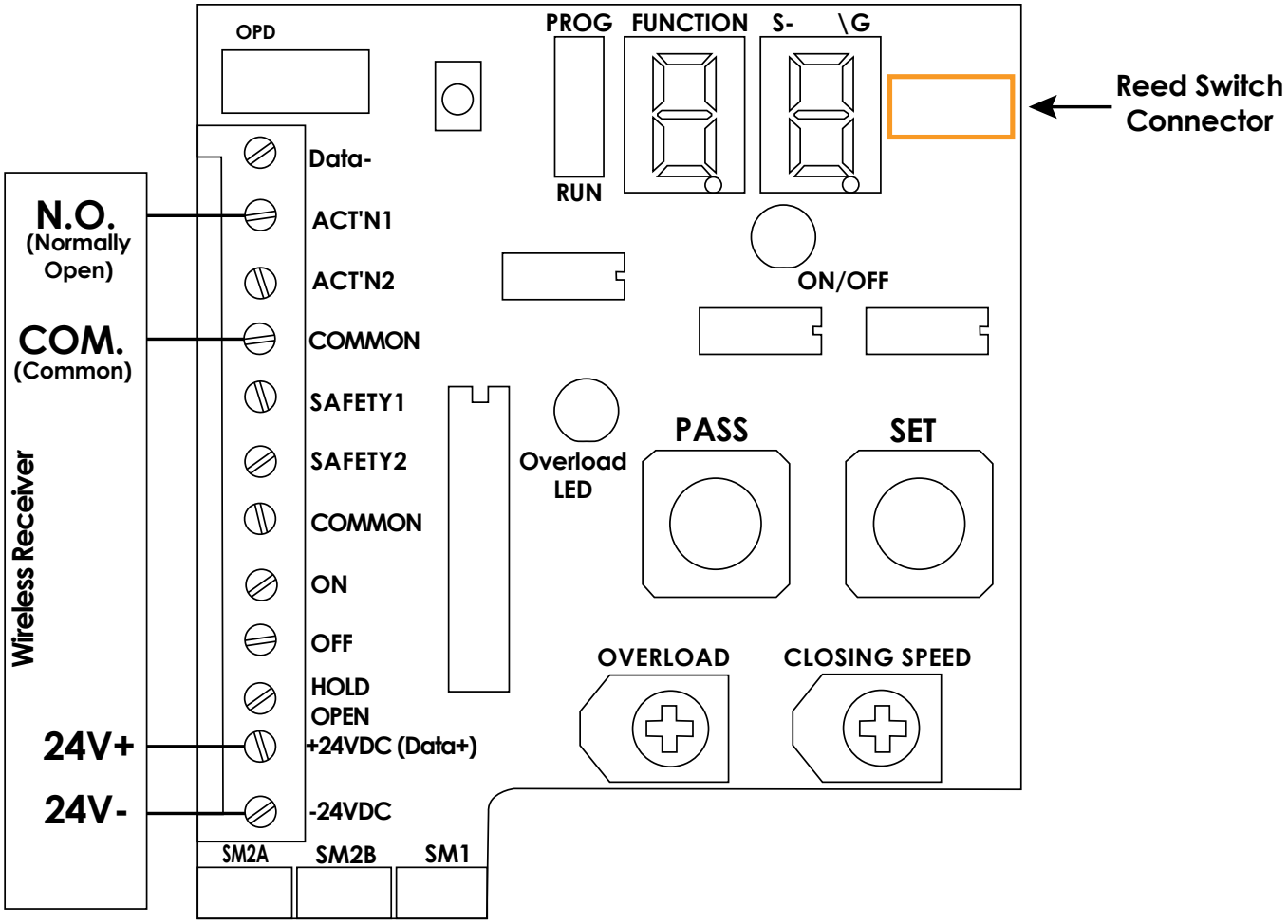

9. To prevent the spindle from oscillating back and forth, use a small flat head screwdriver to rotate the lower limit switch on the operator until the Back Check Magnet is pointing towards the Back Check (B.C.) mark on the housing.

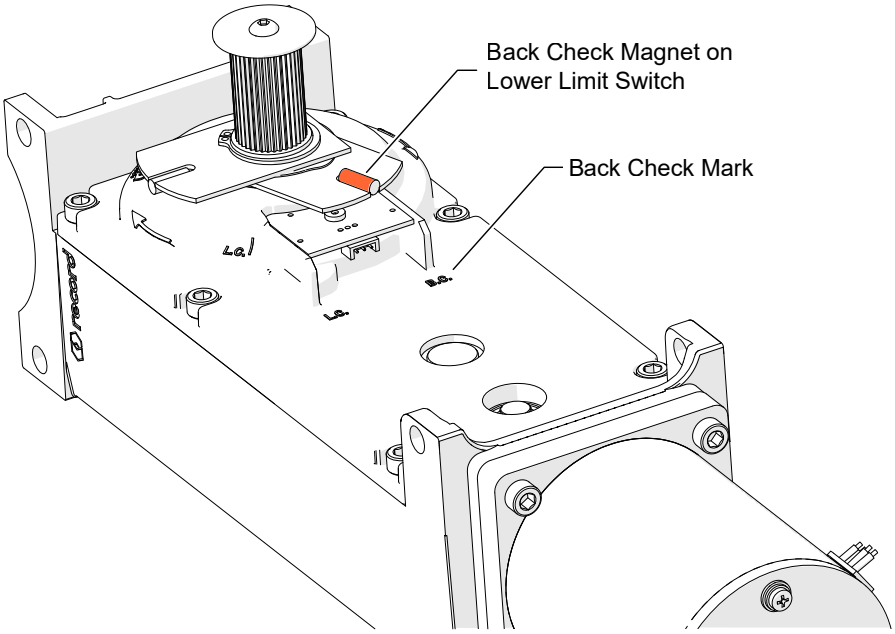

NOTICE

This can be accomplished with the operator still installed in the header.

NOTICE

This is not the final Back Check setting. After the physical installation has been completed, Back Check and Latch Check must be set again. Please refer to chapter called Operator Tuning.

10. Open the door to its fully-open position.

11. Set the operator switch to Hold Open.

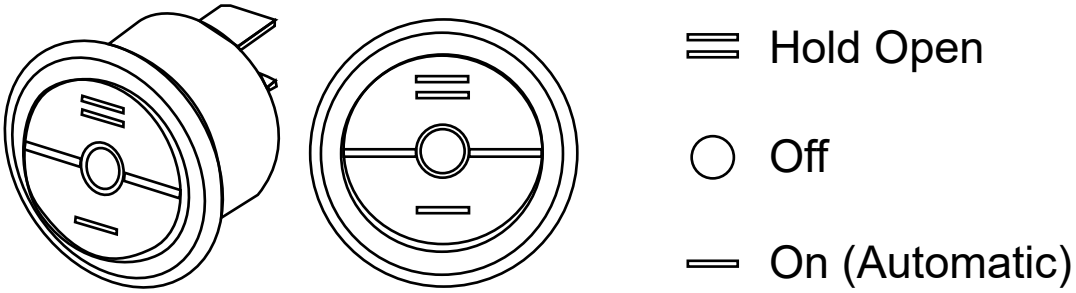

12. Place the arm on the spindle parallel to the open door with the roller touching the door.

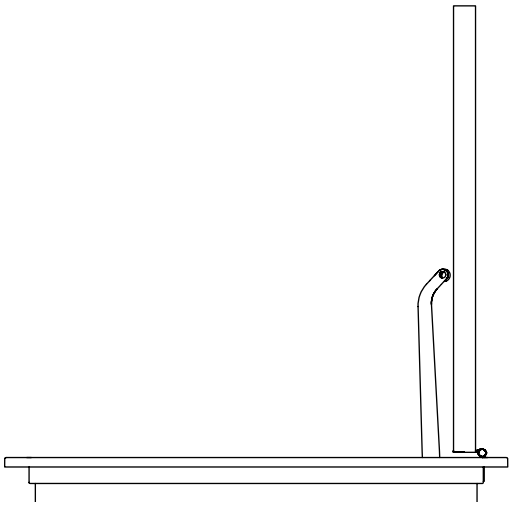

13. Mark the position on the door where the roller touches and then tighten the M6x20mm socket cap screw to secure the arm to the spindle.

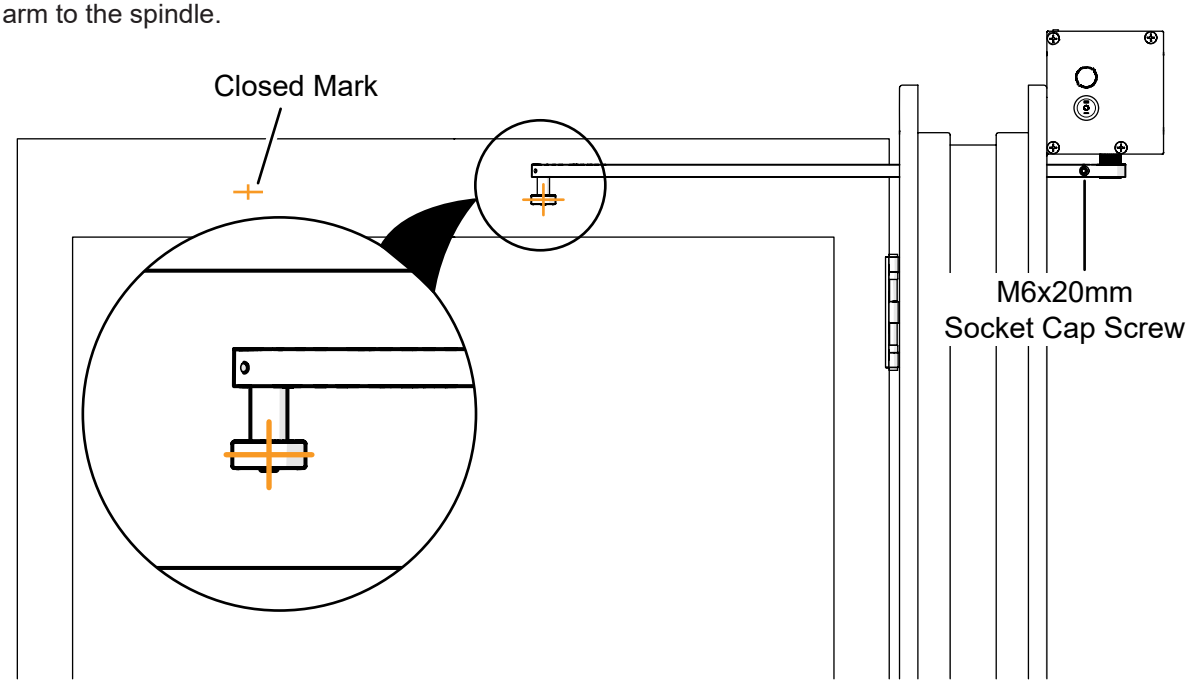

NOTICE

The open position and closed position marks illustrate the travel of the roller during the door swing cycle. In a push configuration with the door opening at 90 degrees, these two (2) marks should be approximately 10-12 inches apart. For openings larger than 90 degrees, the distance between the marks will increase.

14. Set the operator switch to Off.

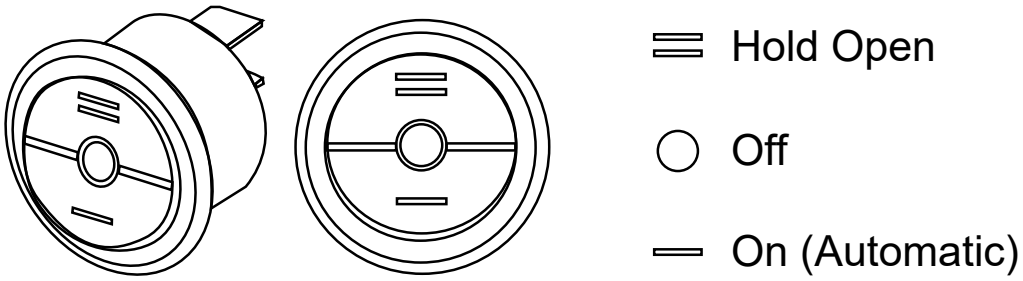

NOTICE

The spindle will turn to the closed position.

15. Manually close the door.

16. Remove the end caps from the push track and position the roller into the track channel.

17. Level and then align the track to the door ensuring the track covers the marks, and also so that the roller is aligned vertically in track.

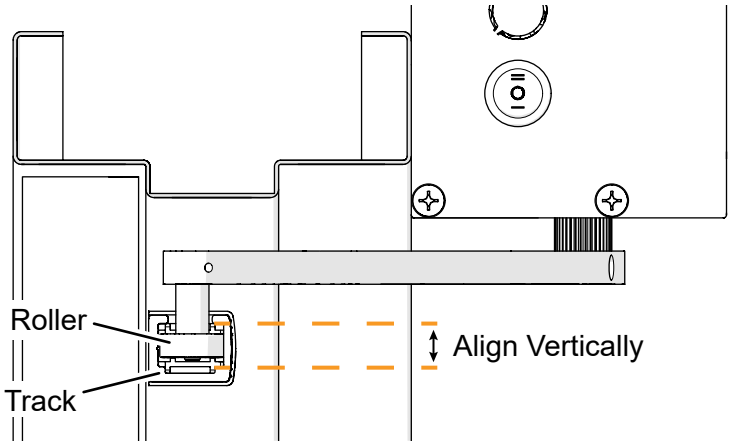

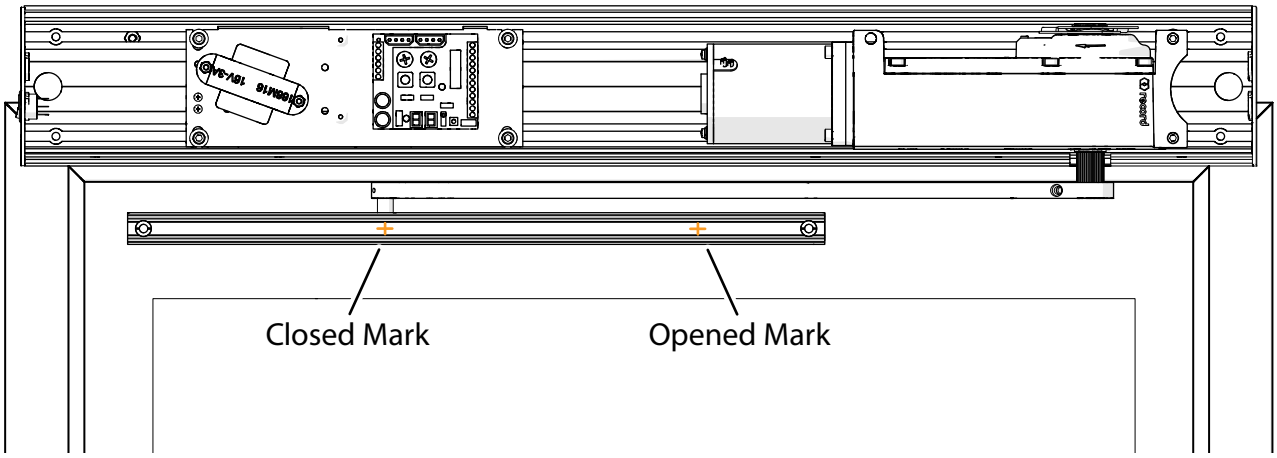

NOTICE

The track must be positioned so that the larger holes face away from the door. The smaller holes should face the door.

18. Mount the track to the door using the appropriate fasteners for the door type.

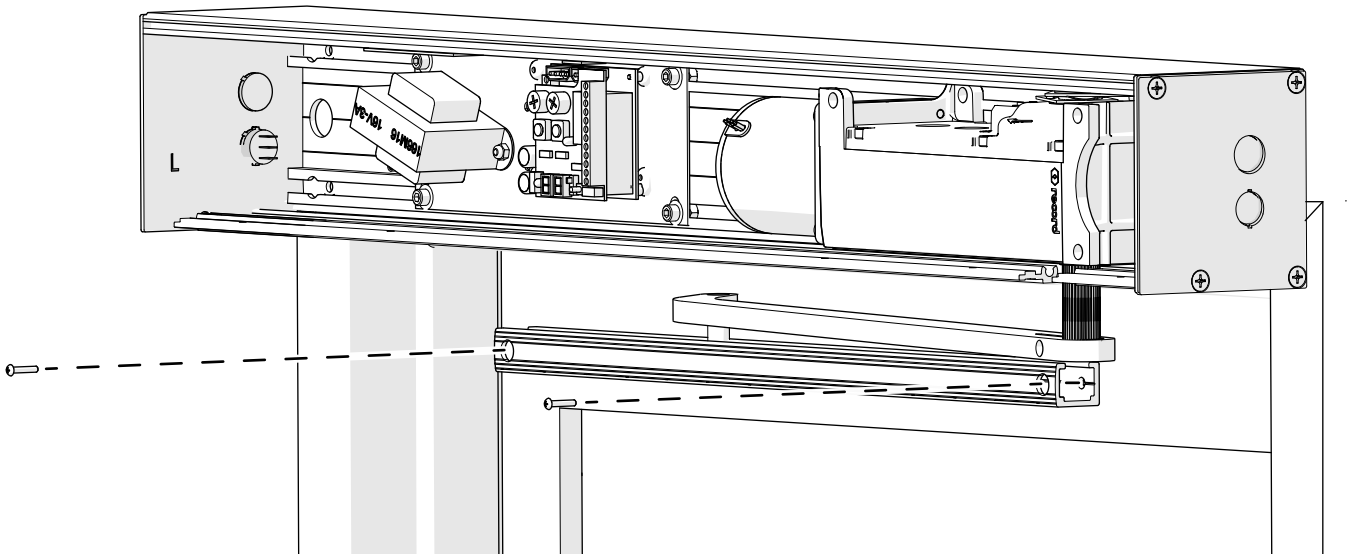

19. Install the end caps to the ends of the track.

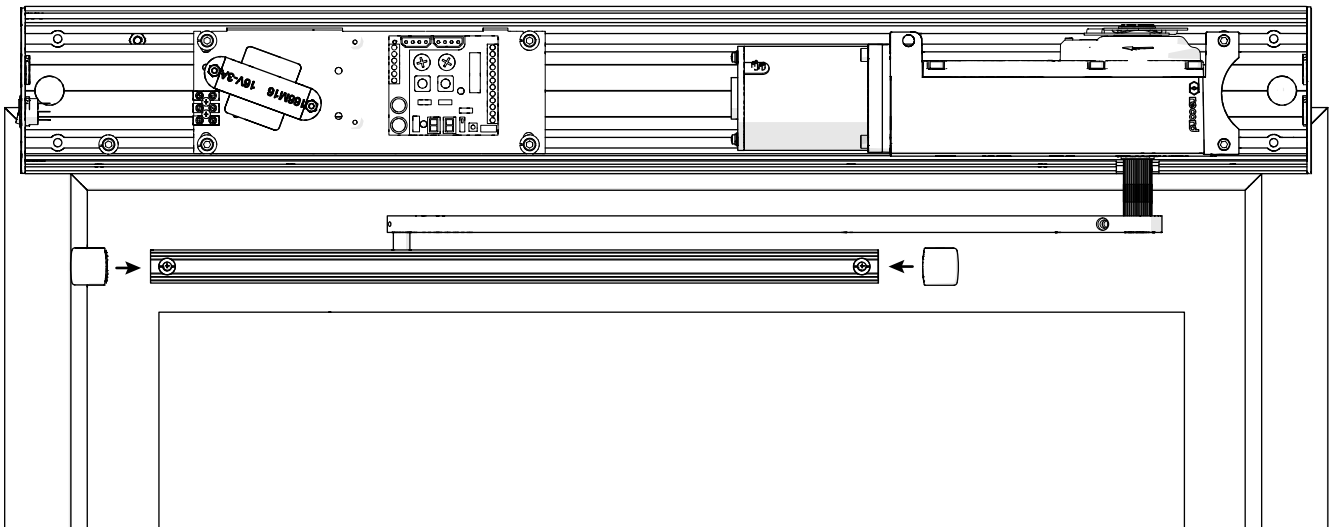

20. Set the operator switch to Automatic and test the operation.

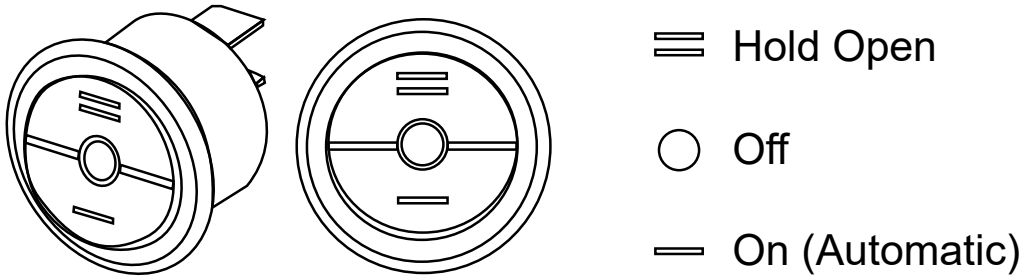

8. Operator Tuning

8.1 Back Check and Latch Check Adjustment

The Latch Check and Back Check functions allow for the door to slow during the final 10 degrees of both open and close cycles.

Both the Upper Limit Switch and Lower Limit Switch have magnets that activate the reed switch during open and close cycles.

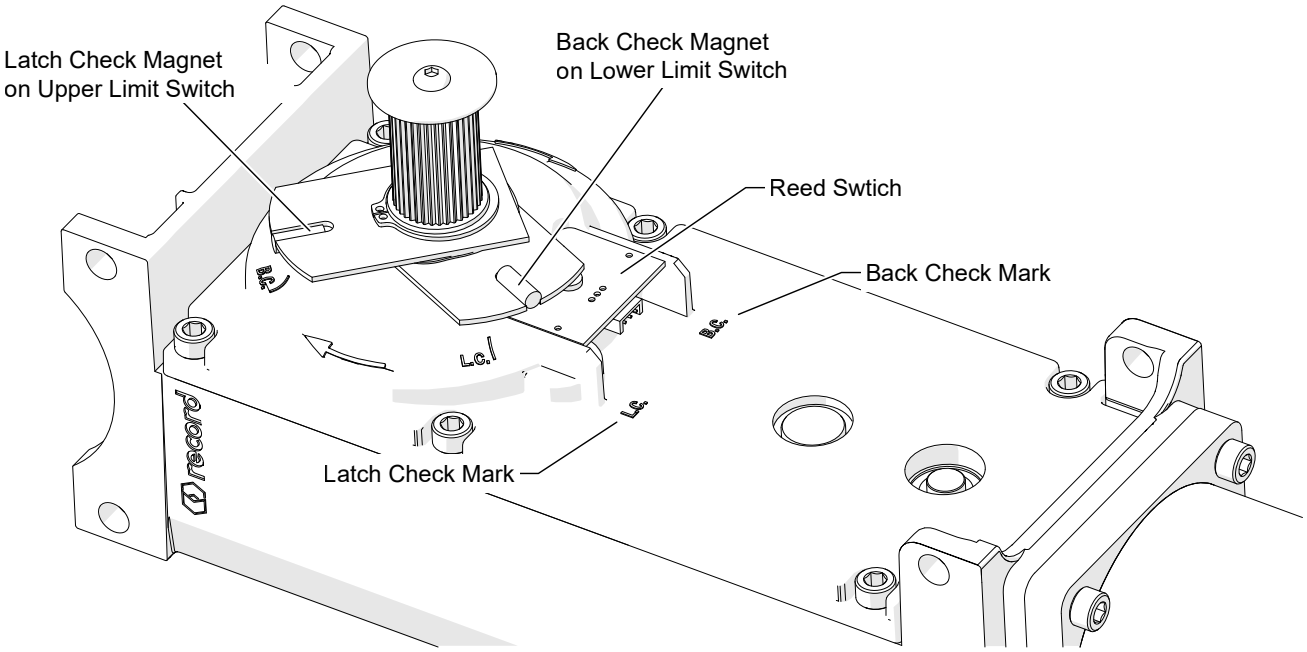

NOTICE

For clearer illustration, the images used in this section do not show the push or pull arm attached to the spindle. However, while performing this procedure, the arm must be attached to the spindle. In addition, the operator motor in the images are shown upside down.

Setting the Latch Check and Back Check positions can be achieved using a small flat head screwdriver.

1. With the door fully closed, rotate the Upper Limit Switch until the Latch Check Magnet is positioned over the Latch Check Reed.

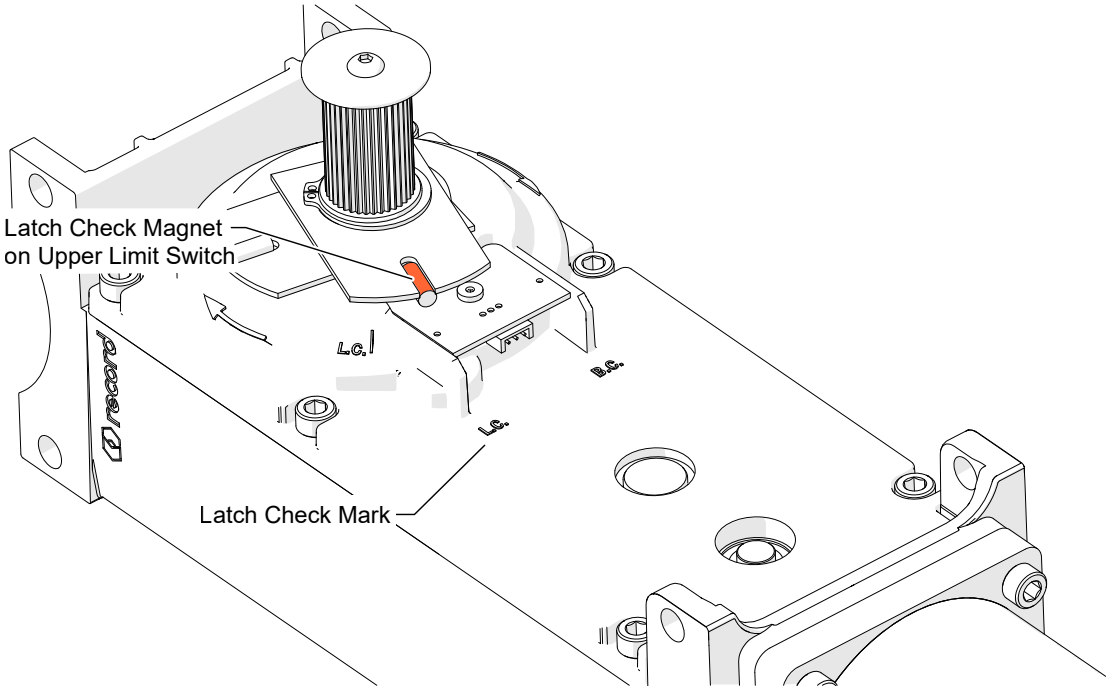

2. For doors that open to 90 degrees at full open, manually open the door to approximately 81 degrees.

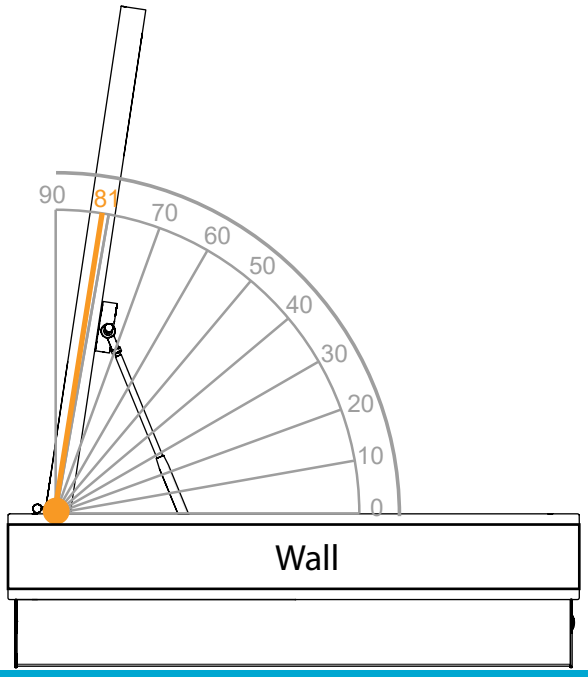

.

NOTICE

For doors that open more than or less than 90 degrees, open the door to approximately 9 degrees from fully open before proceeding with the next step.

3. While holding the Upper Limit Switch in its current position, rotate the Lower Limit Switch until the Back Check Magnet is pointing towards the Back Check (B.C) mark on the housing.

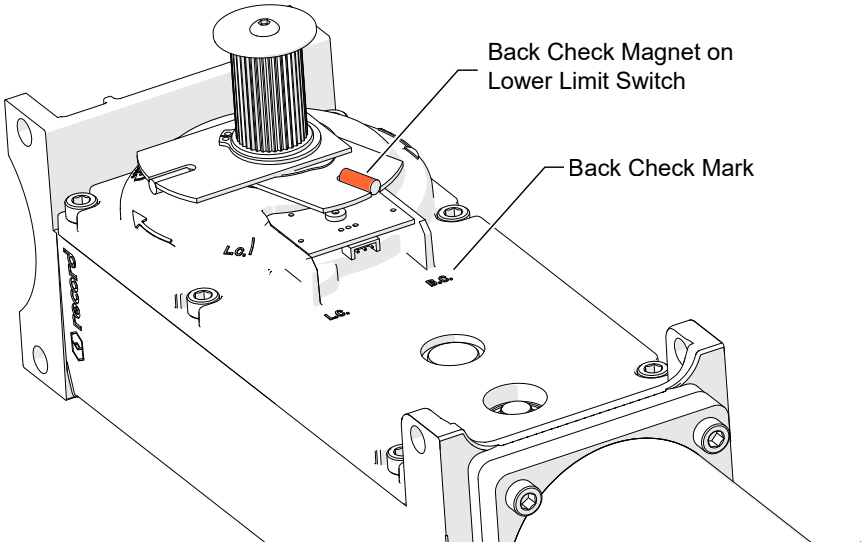

4. Test the door open and close cycles to ensure the door slows before fully open and also slows before fully closed.

8.2 Spring Tension Adjustment

The torsion spring tension in the operator can be adjusted to compensate for windy conditions by providing increased closing force. This is accomplished by moving the internal stopper screw to a different position on the main gear.

There are four (4) settings that incrementally increase the spring tension.

(1= Small Tension Increase, 4 = Maximum Tension Increase)

CAUTION

It is not recommended to increase the closing force beyond the fourth hole. Damage can occur to the tension spring and the excess closing force can be dangerous to persons using the door.

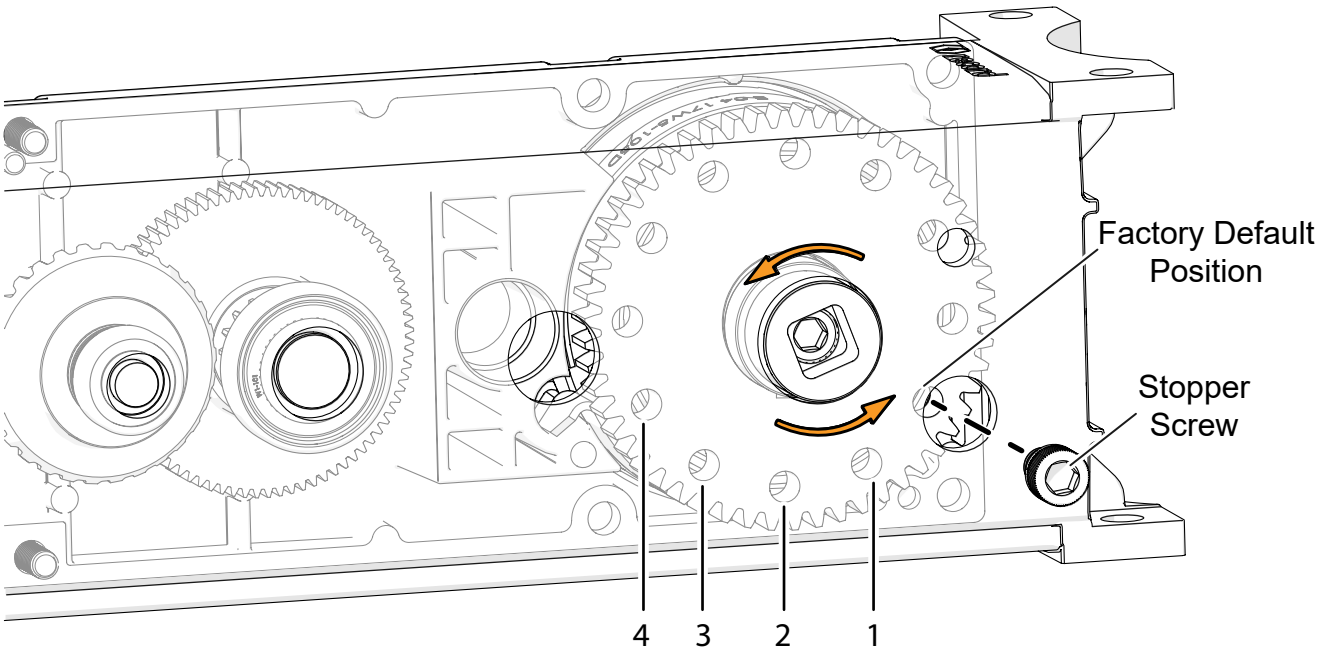

8.2.1 Setting the Spring Tension

1. Disconnect the push or pull arm from the door.
2. Disconnect the operator wiring from the control unit.
3. Remove the operator from the header and place it on its side.
4. Using the Main Arm attached to the spindle, rotate the arm in the closing direction until the stopper screw is visible through the access hole in the operator case.

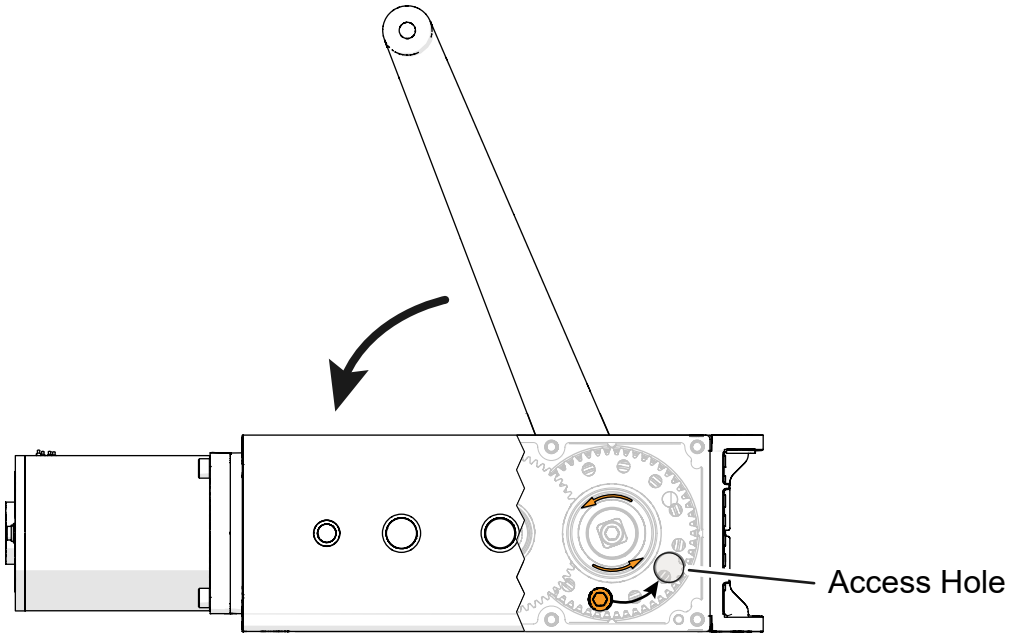

5. Carefully loosen and remove the 5/16-18 x 3/8” socket set screw.

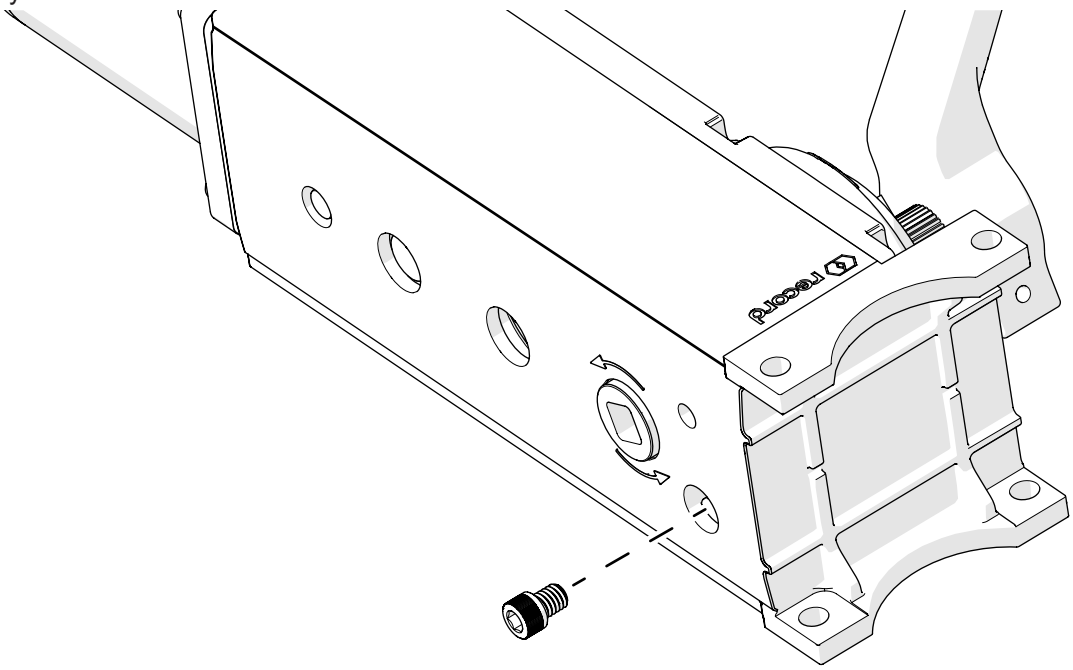

CAUTION

Exercise caution when removing the screw so that it does not drop into the operator case.

6. Rotate the arm in the close direction (same as the direction of the arrows on the operator case) until the appropriate adjustment hole (1-4) becomes visible through the access hole. Then, reinstall the stopper screw into the selected position.

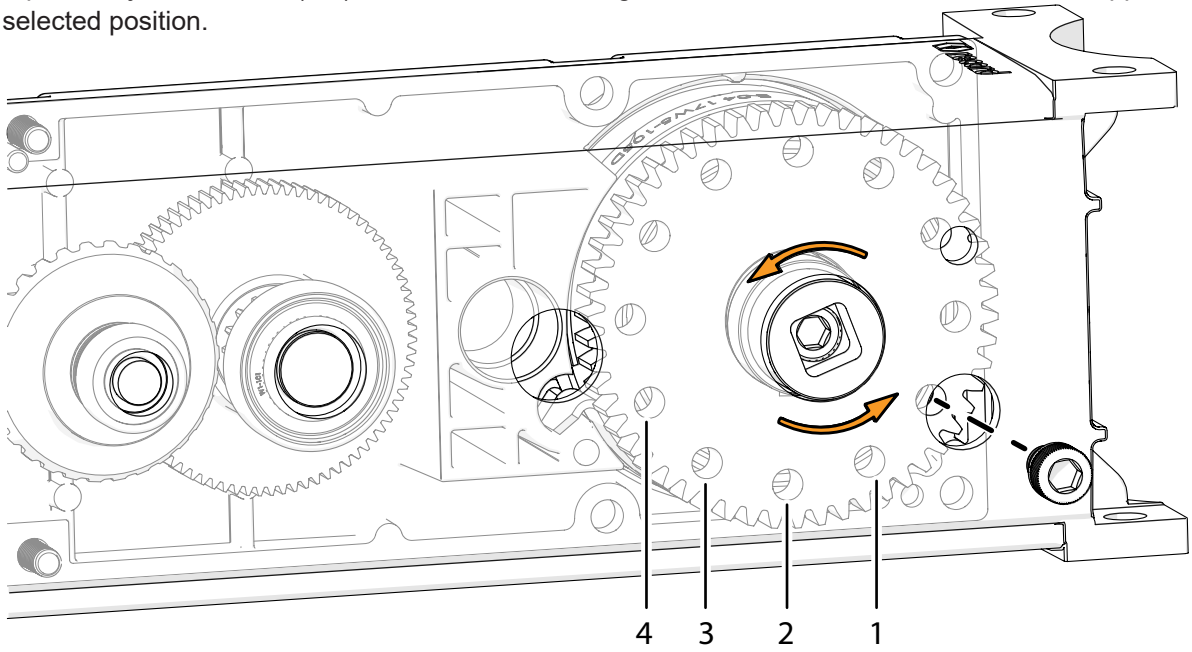

7. Reassemble the operator into the header and connect the arm to the door.

8. Perform the Latch Check and Back Check adjustments after making changes to the closing force.

9. Test the door closing force and readjust if necessary.

9.0 Door Operating Mode

9.1 Basic Operation

When the door receives an activation signal, it will follow the programmed data. The door opens and then slows before the fully-open position until it reaches the full door stop position.

Once the preset open period has completed, the door will close at the preset closing speed. It will brake to a low speed just before the fully-closed position and then close slowly until it reaches the fully-closed position.

When an activation signal activates while the door is closing, the door will stop and reverse to open.

9.2 Operation Switch

The operation switch is a 3-position switch located on the end plate of the header. With the door in the closed position, check that the door is unlocked and that the main power switch is on.

NOTICE

The main power isolator switch should be positioned to the side of the header.

Check the status of the operation switch.

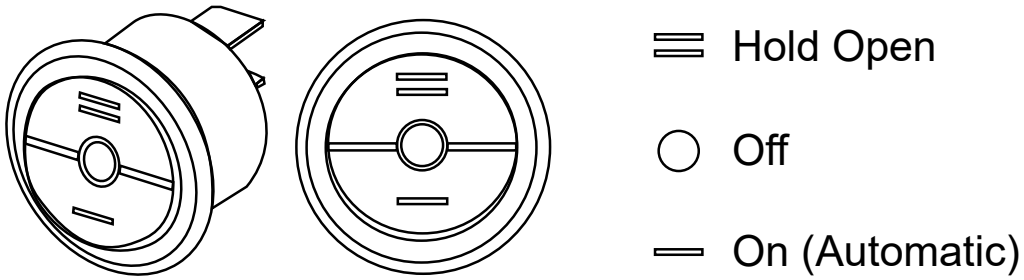

NOTICE

The operation switch must be set to the Automatic position before making programming changes.

9.2.1 Automatic Mode (I)

This mode is used to activate the operator.

Press the Automatic (I) button and the door will open to the 80 degree position at full opening speed. It will then slow for the final 10 degrees of opening for the duration of open check until the full opening cycle is complete..

NOTICE

There is no need for a learning cycle as the open position is already preset during installation.

After the preset open time has completed, the door will begin to close at the set closing speed. When it reaches the final 10 degrees of closing, the door will slow until it reaches the full close position (close check).

9.2.2 Hold Open Mode (II)

When this mode is set, the door will hold open indefinitely until either loss of power or a change of mode is performed.

No activation or safety sensor signals will be active in this mode because the door is stationary in the open position. The door will remain open continually by a pulsed signal to the motor without overheating.

To close the door, select either Automatic (I) or OFF (0) position and the door will close smoothly and gently to the full-closed position.

9.2.3 OFF (Manual) Mode (0)

When this mode is set, all opening signals are deactivated and the door will open and close manually.

No activation signals or safety sensor signals (if equipped) will be active in this mode as the door is stationary in the closed position.

Even though power will remain on and supplied to the unit, all signals will be ignored. The door can be opened with appropriate force that is compliant with current standards.

10. Control Unit Settings

10.1 Digital Board Diagram

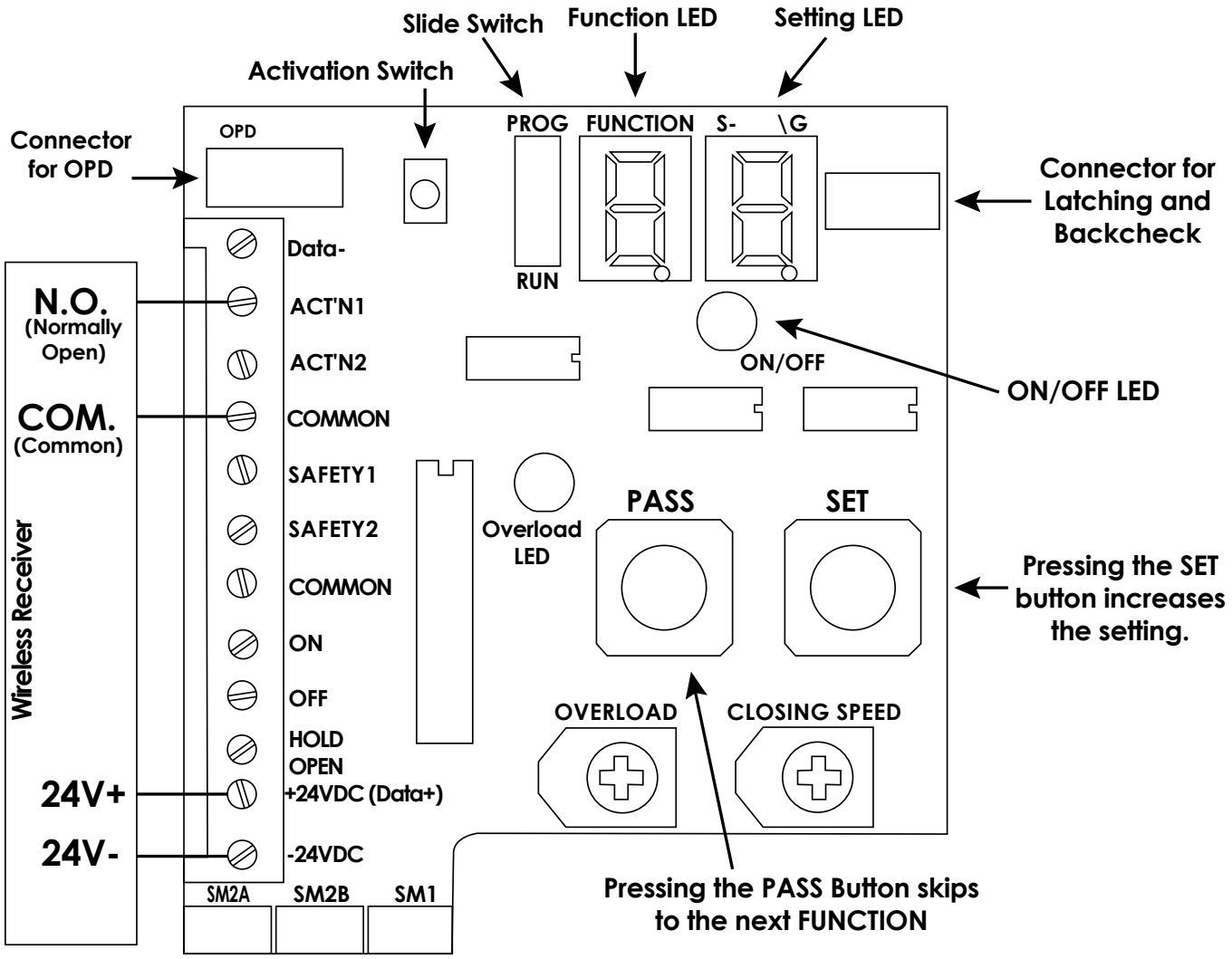

10.2 Digital Board Wiring

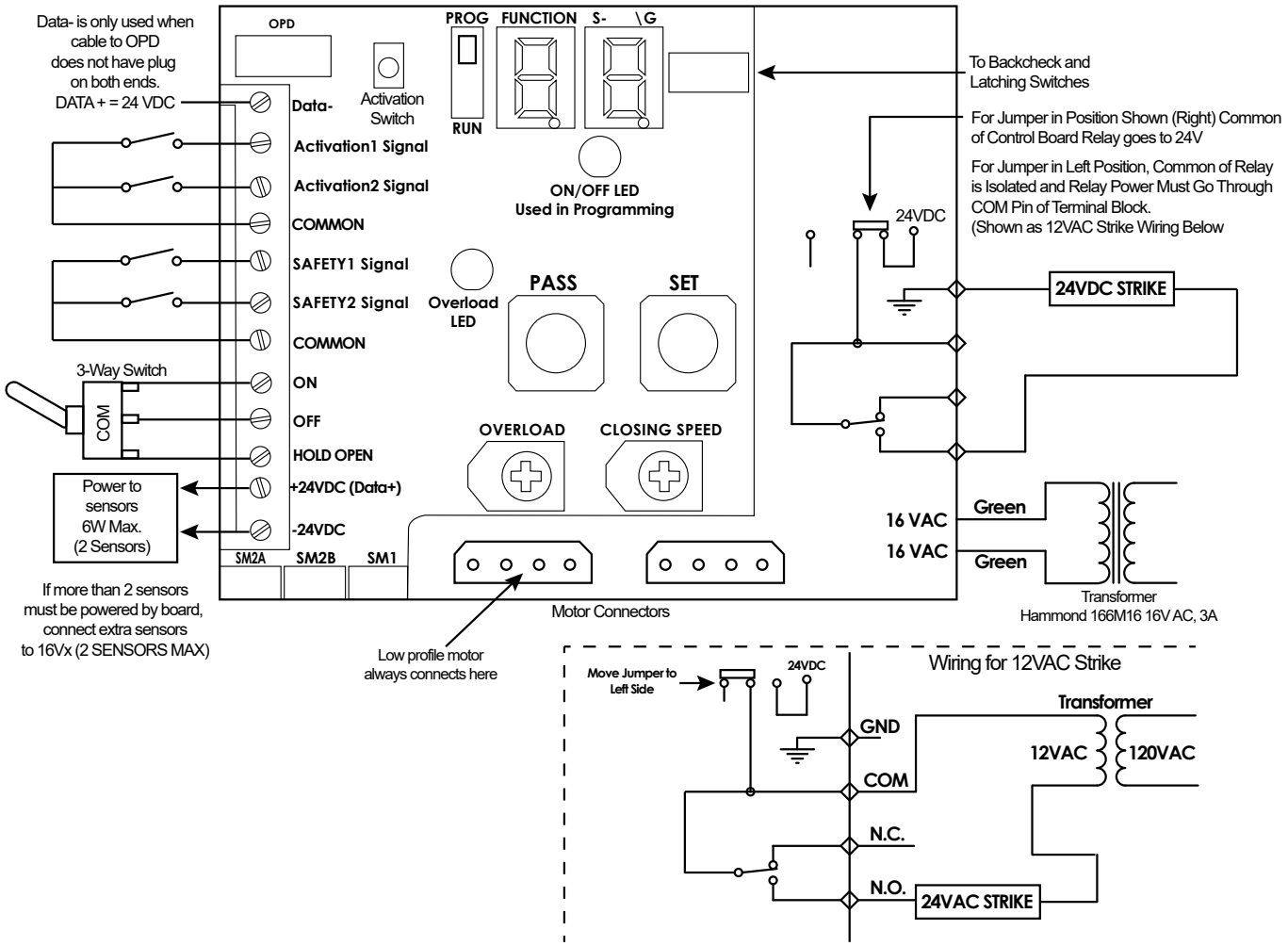

NOTICE

A switch or jumper must be wired from the ON terminal to the OFF terminal for the programming to work. This is only needed if there is no switch on the control unit.

10.3 Digital Board Specification

Inputs	Line Voltage		Transformer (Hammond)
AC Voltage	120VAC 60Hz	Low Energy	#166M16 – 16VAC – 3AMP
Activation 1 (ACT'N1)	• First input to open the door. Instant Activation (i.e. push buttons) • ON = Closed contact to ground/common • See Function A", Setting A1" for description of alternate operation.		
Activation 2 (ACT'N2)	• Second input to open the door. Delayed activation. • ON = Closed contact to ground/common • See Function A", Setting A1" for description of alternate operation.		
Safety 1	• For Safety 1 ON door will not open if presently fully closed and door will not close if presently fully opened • ON = Closed contact to ground/common. (i.e. overhead presence sensors [OPD])		
Safety 2	• For Safety 2 ON and ACT'N1 input ON, door will drive at hold speed. If ACT'N1 input OFF, door closes. If Safety 2 OFF, door will open. • ON = Closed contact to ground/common. (i.e. Door mounted sensor on swing side [DMPS])		

Outputs	
Motor	2 motor connectors to drive door in either clockwise or counter-clockwise direction.
DATA- and DATA+	Interface with Overhead Presence Sensor (OPD). (Replaces LO-21K lockout relay)

11. Control Unit Programming

11.1 Programming Specification (Digital Board)

NOTICE

To make changes to the program settings, set the 3-position switch to Automatic (I).

NOTICE

Product will not operate when the Slide Switch is set to Program mode.

There are two 7 SEGMENT LED DISPLAYS used for programming:

Function LED = Programmed Function

Setting LED = Value of the Function indicated on first digit

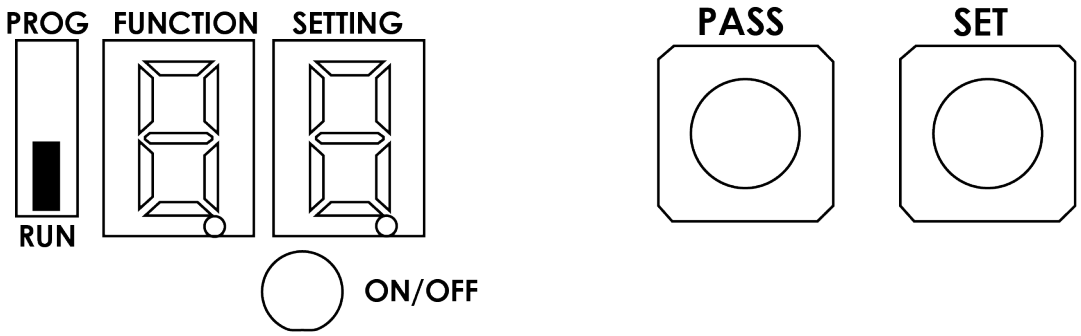

There are three (3) switches that relate to programming:

Slide Switch	RUN	Function settings can be viewed but not modified.
	PROG (program)	Function settings can be modified. As a safety feature, THE DOOR WILL NOT OPEN WHEN THE SLIDE SWITCH IS SET TO PROG.
PASS Push Button	To select the next function	
SET Push Button	To change the present function value (when the Slide switch is in PROGRAM mode).	

Adjusting Settings - Slide Program/Run Switch to:

1. PROGRAM MODE - Functions can be modified.
2. RUN MODE - Function settings can be viewed but not modified.

Programming:

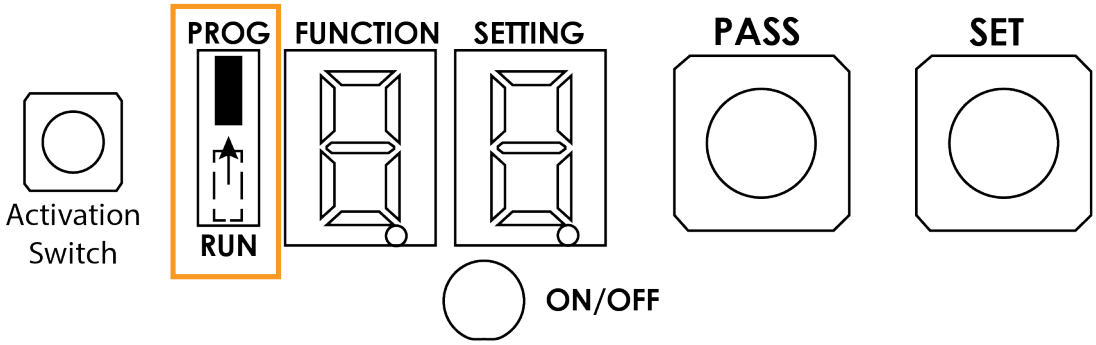

1. Move PROG/RUN Switch to “PROGRAM’.
2. Press PASS button to scroll through Functions.
3. Press SET button to change present function value.
4. Move PROG/RUN Switch to ‘RUN’ when adjustment is complete.
5. Press the Activation Switch to test.

11.2 Overload (Opening Torque Adjustment)

Overload is the torque adjustment setting for the amount of pressure with which the door pushes against an obstruction before cutting OFF for safety.

11.2.1 Overload POT - Basic Setting Position for a Standard Door

NOTICE

For more information, refer to the section titled, “Detection of an Overload.”

1. Turn the Overload pot counter-clockwise until it stops.

NOTICE

If additional force is needed, it is recommended that the overload pot be adjusted no more than 1/4 turn in the clockwise direction.

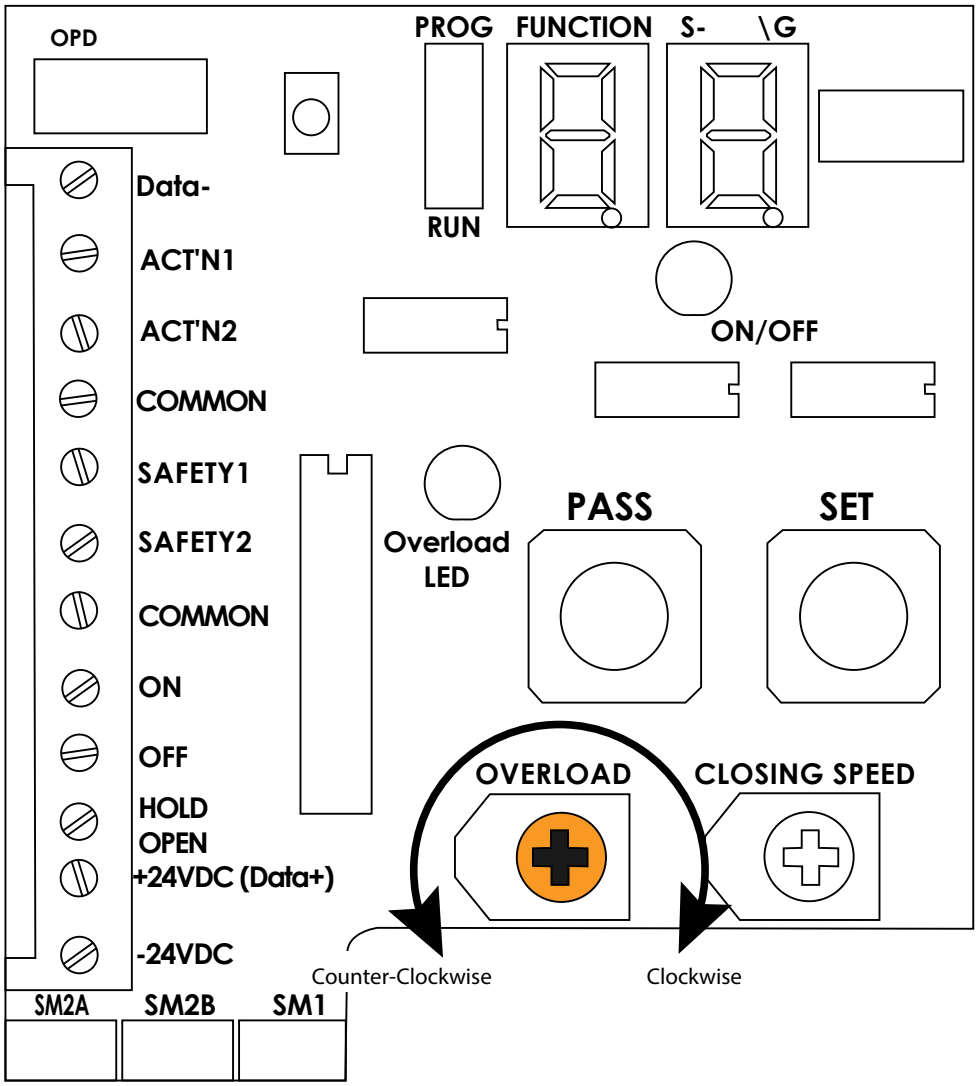

2. Test the door to ensure the red Overload LED does not turn “on” when opening.

3. Place an obstruction in front of the door and test the door open cycle. The door should turn off after about 2 seconds of engaging with the obstruction and then it should close by spring pressure.

Function LED	Setting LED			Function Description	F.A. & H.C. Default Setting
0	0 to F	0 = Slowest		OPENING SPEED	A
		F = Fastest			
1	0 to 5	0 = Slowest		Back Check Speed	1
		5 = Fastest			
2	0 to 5	0 = Slowest		Latch Speed	5
		5 = Fastest			
3	0 to 9	0 = Slowest		Hold Speed	2
		9 = Fastest			
4	1 = 2 Sec	6 = 12 Sec	b = 22 Sec	Activation Time The time that the door remains open starting when the activation trigger goes OFF. 2 to 30 sec.	4
	2 = 4 Sec	7 = 14 Sec	c = 24 Sec		
	3 = 6 Sec	8 = 16 Sec	d = 26 Sec		
	4 = 8 Sec	9 = 18 Sec	E = 28 Sec		
	5 = 10 Sec	A = 20 Sec	F = 30 Sec		
5	0 = 2 Sec	4 = 10 Sec		DELAY ON OPERATE The time delay before operating the door, starting when ACT'N2 trigger goes ON. 2 to 16 sec. This is valid when Setting A1 has the LED OFF.	1
	1 = 4 Sec	5 = 12 Sec			
	2 = 6 Sec	6 = 14 Sec			
	3 = 8 Sec	7 = 16 Sec			
8	0 = 0 Sec			SAFETY 1 INHIBIT The time that a Safety1 input is ignored (inhibited), starting when the door goes into Latch.	0
	1 = .50 Sec				
	2 = 1.00 Sec				
	3 = 1.50 Sec				
	4 = 2.00 Sec				
9	0 = 0.125 Sec			STRIKE DELAY The time between Strike ON and door starting to open. HA Board ONLY	0
	1 = 0.25 Sec				
	2 = 0.50 Sec				
	3 = 1.00 Sec				
	4 = 1.50 Sec				
	5 = 2.00 Sec				

Code Indication		ON/OFF LED = ON	ON/OFF = OFF	Default Setting
Function LED	Setting LED			
A	0	Safety 2 OFF at Back Check	Safety 2 always active	LED OFF
A	1	ACT'N1 is connected to push button and always opens the door.	ACT'N1 Instant activation	LED OFF ACT'N1 instant
		ACT'N2 is connected to the door and is only active after ACT'N1 is pressed and before the door closes and gets to the Latch point	ACT'N2 A delayed activation (delay time programmed through Function A5)	ACT'N2 = delayed activation
A	2	Lockout ON – during closing Safety1 is active, if door stops moving (i.e. from hitting an obstruction).	Lockout OFF Safety1 is always active	LED ON Lockout ON
		Safety1 is NOT active, if door is moving		
A	4	Reading out numbers of door opening cycles	No readout	LED OFF No readout
	To obtain the number of opening cycles that the door has gone through, Press SET button while FUNCTION= A, SETTING= 4. Example: Readout of 3 2 (pause) 7 0 = 3,270 door cycles			
A	5	Safety1 sensor mounted on closing side of door	Safety1 sensor mounted overhead	LED OFF Safety1 mounted Overhead
A5 - LED OFF (Overhead Sensor)	Door Opening		Safety1 Sensor has no effect	
	Door Fully Open		Safety1 Sensor ON = door will not close	
	Door Closing		A2 Setting ON. Door moving = Safety1 has no effect (door will open)	
			A2 Setting ON. Door stopped, Safety1 ON = door will not open	
			A2 Setting OFF. Safety1 ON = door will not open	
	Door Fully Closed		Safety1 Sensor ON = door will not open	
A5 - LED ON (Door mounted Sensor)	Door Opening		Safety1 sensor has no effect	
	Door Fully Open		Safety1 sensor ON = door will not close	
	Door Closing		Safety1 sensor ON = door drives at HOLD speed	
	Door Fully Closed		Safety1 sensor has no effect	

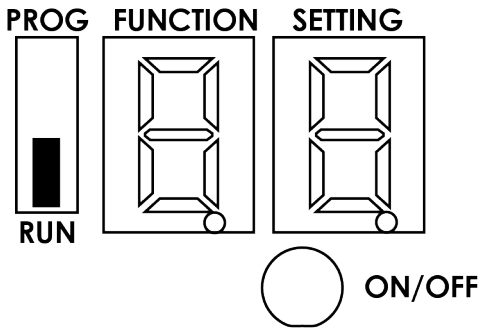

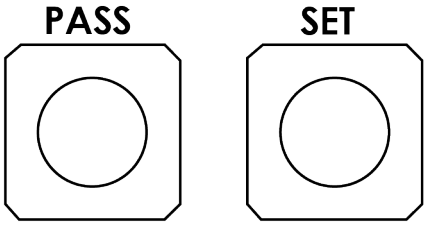

CODE INDICATION		ON/OFF LED = ON	ON/OFF = OFF	DEFAULT SETTING
FUNCTION LED	SETTING LED			
A	6	Safety1 sensor is a Normally Closed input (N.C.)	Safety1 sensor is Normally Open input (N.O.)	LED OFF Safety1 is Normally Open
A	7	Safety2 independent of Act'n1 Safety2 is ON = door holds Safety2 is OFF = door opens	Safety2 works with Act'n1 Safety2 & Act'n1 both ON = door holds If Safety2 is OFF = door opens. If Act'n1 is OFF = door closes	LED OFF Safety2 works with Act'n1.
A	8	Only for Fire door mode in California. Manually pulling the door closed while it is fully open will close the door ignoring all activation triggers including Hold Open Turning to OFF will reset this mode.	Door will not shut when manually pulled closed	LED OFF
A	9	Safety monitoring ON for SM1. This monitors SAFETY1 input. See safety monitoring wiring and notes	Safety Monitoring OFF for SM1	LED OFF No safety monitoring
A	A	Safety monitoring ON for SM2A. This monitors SAFETY2 input. See safety monitoring wiring and notes	Safety Monitoring OFF for SM2A	LED OFF No safety monitoring

NOTICE

When setting up A8, it is important to follow these steps:

1. Turn the overload all the way down (counter-clockwise for analog potentiometer).
2. Make sure the Back Check speed is slow enough that it will not trigger the overload while the door is fully open.

11.2.2 Reset to Default Setting

When in program mode, press both the SET and PASS buttons for 5 seconds to reset to default settings.

11.3 Safety Monitoring

When Safety Monitoring is enabled, the 09827 control unit communicates with the safety sensor before every movement of the door to ensure that the Safety inputs are functioning correctly and all wires are in place.

NOTICE

- Failed communication before opening will prevent the door from opening.
- Failed communication before closing will prevent the door from closing.
- When there is any failure in communication, the Overload LED will flash.

11.3.1 Setup

1. Wire the safety sensor to the board. Refer to the following wiring diagram.
2. If not already done, enable the system for safety monitoring. For BEA sensors, this must be done with the remote control.
3. Verify that the door opens.
4. To ensure that the safety monitoring has been properly set up, unplug the SM1 and/or SM2A connectors separately to verify that the door does not open when triggered.

NOTICE

If set up properly, the Overload LED will flash 1/3 of a second.

5. Reconnect the SM1 and/or SM2A connectors into the board after completing the safety test.

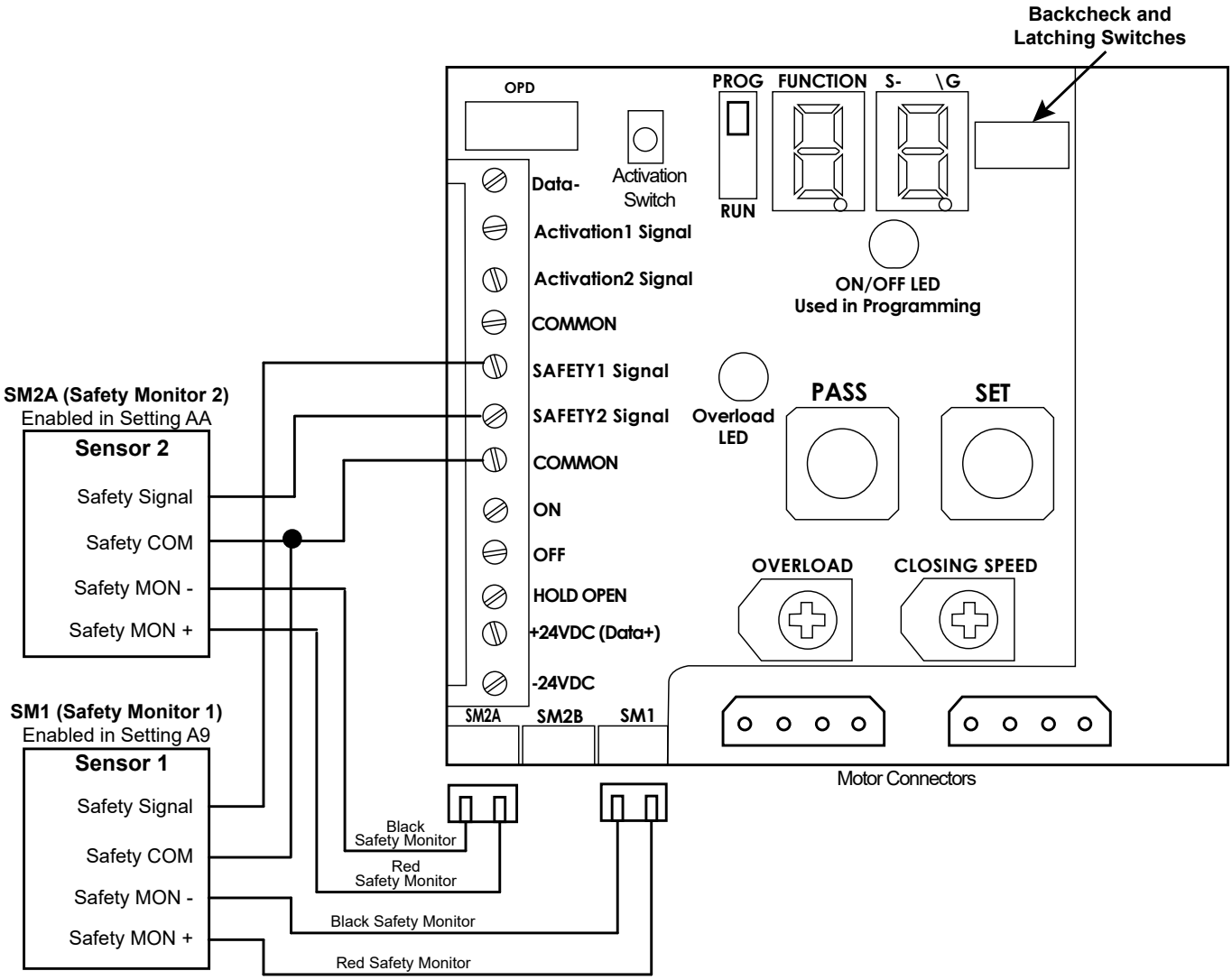

11.4 Safety Sensor Connection - BEA Bodyguard

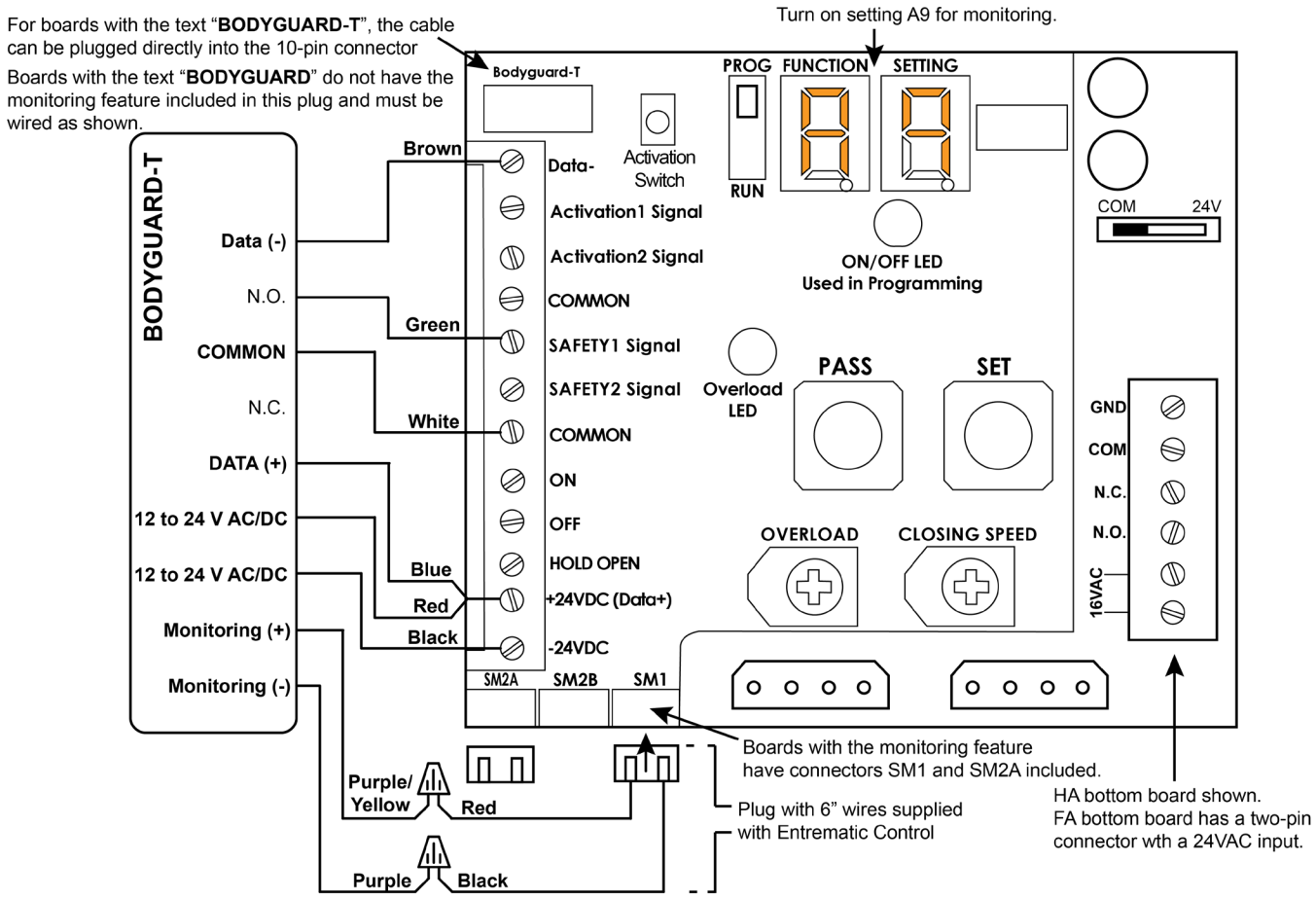

11.5 Safety Sensor Connection - BEA Superscan

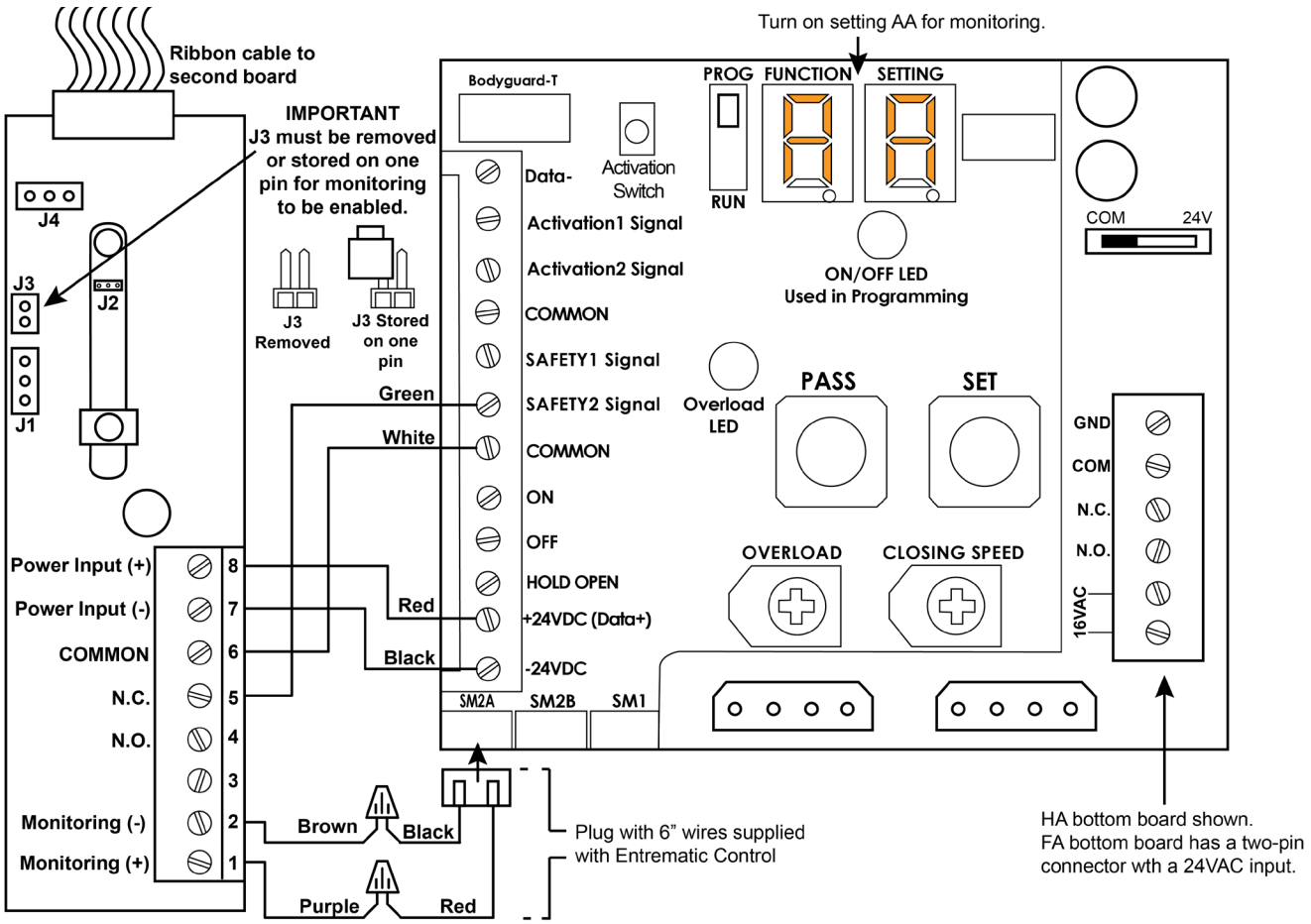

11.6 Safety Sensor Connection - Optex OA-FLEX

IMPORTANT NOTE:
For safety monitoring, test Input/Safety Output of OA-FLEX T must be set to Low

Test Input/Safety Output of OA-FLEX T is set through DIP 11 and should be up.

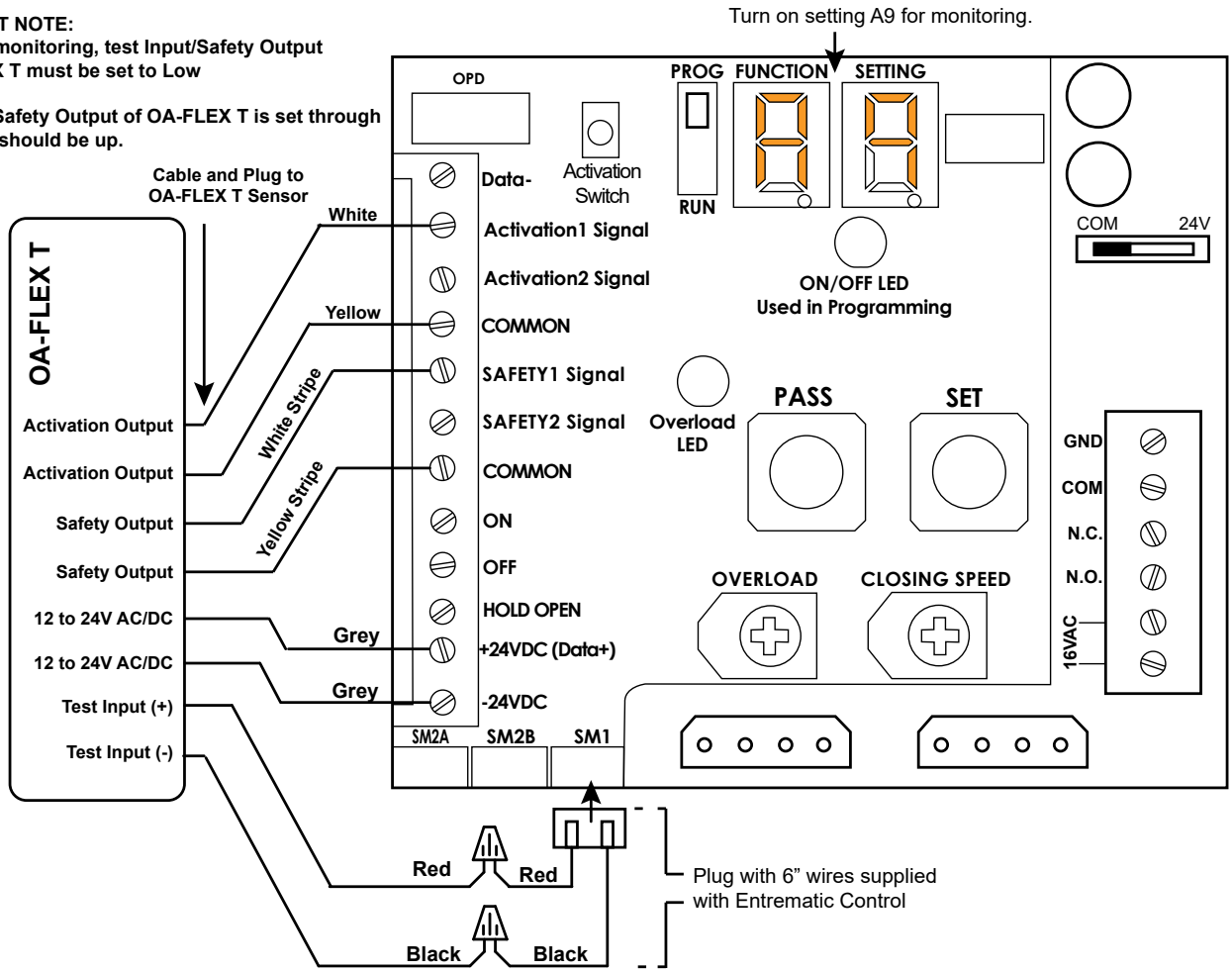

12. Troubleshooting

Problem	Possible Solution
Programming function does not work	1. Make sure ON/OFF switch is connected. A switch must be connected from ON terminal pin to OFF terminal pin for programming to work. 2. Slide switch must be set to PROG for programming options to be modified.
Door does not open after triggered	1. Check power supply and is ON (7 segment LEDs will light up). 2. Slide switch should be set to RUN. 3. Check which activation situation is selected. See setting A1 - If LED is ON for setting A1, ACT'N2 will only activate the door while it is closing and has not reached Latch. 4. Check if ON/OFF switch is connected. A switch must be connected from ON terminal pin to the OFF terminal pin for the doors to open.
Door does not open if triggered immediately after going into Latch	Increase the Safety1 inhibit time. See setting 8.
Door does not delay when triggered even when a delayed time has been set up	1. See setting A1 - If LED is ON for program setting A1 this is a special activation situation and there is no delay. 2. Only ACT'N 2 (Activation Trigger 2 input) will provide a delay on opening. ACT'N1 (Activation Trigger 1 input) and the push button on the control unit will ALWAYS give an instant trigger regardless of how the time delay has been set up.
Door opens slowly	1. Check to see if Back Check and Latching magnets are adjusted properly. 2. Increase opening speed - Function 0.
Door will not Open	1. Make sure the door is unlocked and main power is on. 2. Remove obstacle that could be causing the door not to open. 3. Make sure 3 position switch is set to Automatic.
Door will not Close	1. Remove any obstacle from in front of the door, which is activating the sensor (if equipped), thus keeping the door open. 2. Make sure the 3 position switch is set to Automatic.

NOTICE

If the problem persists, contact your authorized Record representative for service.

US #: 1-800-438-1937

CAN #: 1-877-348-6837

13. ADA Adjustments

13.1 Low Energy Operator Adjustment to ANSI A156.19 Standard

The following specifications are based on neutral air pressure conditions.

13.1.1 Opening Speed

The minimum opening time to the back check or 80 degrees is 3 seconds or longer. Total opening time should be 4 seconds or longer.

13.1.2 Closing Speed

The minimum closing time to latch check depends on the size and weight of the door.

Door Leaf Width - Inch (mm)	**Up to 100 lbs. (45kg)**	**Up to 140 lbs. (64kg)**
39 (914) and less	2.0 sec	2.3 sec
Door Leaf Width - Inch (mm)	**Up to 110 lbs. (50kg)**	**Up to 150 lbs (68kg)**
43 (1067)	2.3 sec	2.7 sec
Door Leaf Width - Inch (mm)	**Up to 120 lbs. (55kg)**	**Up to 160 lbs. (73kg)**
48 (2119)	2.8 sec	3.2 sec

For doors of other weights and widths, use the following formula:

$$T = \frac{D \bullet \sqrt{W}}{188}$$

W = Weight of door (lbs.)

D = Width of door (inch)

T = Closing time to Latch Check (sec)

13.1.3 Latch Check

The door must not close through the final 10 degrees in less than 1.5 seconds.

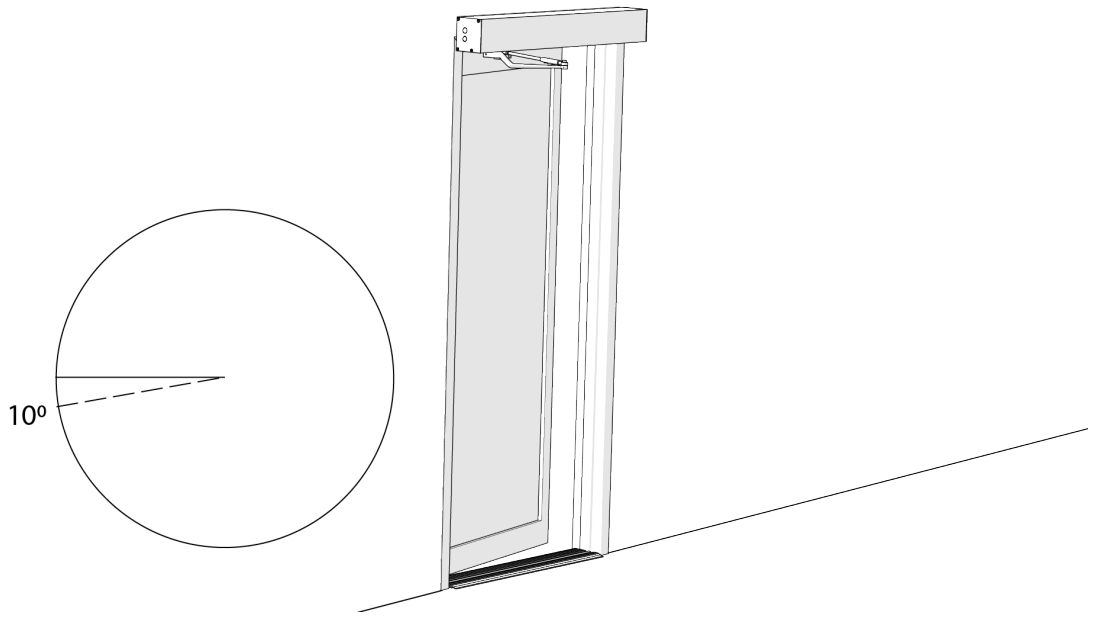

13.2 Adjustments for ADA (Americans with Disabilities Act)

Adjustments are provided for Opening speed, Back Check speed, Activation Time (Hold Open), Activation Delay, and Overload current with LED indicator.

13.3 Detection of an Overload

Current flowing longer than 2 seconds will cause the door to close. See below recommended procedure for adjustment of the control:

1. Turn the Overload (current) control fully clockwise to increase the current limit to maximum and prevent any detection entirely. This setting can be used to inhibit the overload detection / shutdown feature.
2. Adjust Opening speed as desired. Note that the control has a built in time reference of 4.0 seconds. Operation of the door will not be affected. However, if the door moves from close to Back Check in less than 4.0 seconds, the LED will flash as the door closes to indicate that the Opening speed may be a little fast.
3. Lock or obstruct the door and apply an Activation Trigger. Turn the Overload control counter-clockwise until the LED becomes steadily illuminated, to indicate detection of excessive current. The control may be turned counter-clockwise a little more to ensure positive detection. After 2 seconds the door will close.
4. Adjust the Activation Time (Hold Open) as desired with a minimum of 5 seconds.
5. Adjust the Activation Delay time as desired. This will depend on the distance of the activation devices to the door.

14. Completing the Installation

14.1 Additional Components: Sensor(s) / Knowing Act Devices

14.1.1 Safety Sensors

The control unit can accommodate overhead and door mounted safety sensors. To permit safe passage through, the closing door will reverse (if equipped with door mounted safety sensor) to full open position, if an obstruction is encountered during the closing phase. If equipped with door monitor sensor, the operator will then resume its standard closing cycle and repeat when the obstruction remains.

- If equipped, the safety sensor on the closing side of the door will activate while the door is closing. The door will reverse to open.
- If equipped, the safety sensor on the opening side of the door is activated by another pedestrian while the door is opening, the door will stall until that pedestrian has left the opening area.
- If the door is equipped with an overhead safety sensor, the door will not open when there is an obstruction or pedestrian in the swing path.
- If the door is equipped with an overhead presence sensor in the closed position, the door will not open when there is an obstruction or pedestrian in the swing path.

14.1.2 Activation Devices

The HA8 Operator is compatible with all devices using a hardwired or radio-controlled dry contact switch. All activation signals should be wired to Activation 1 and Common. When a door is used in a vestibule, the built-in sequence can be used to allow both doors to operate in sequence. This is achieved by wiring Activation 2 and common on both boards together. The delay at which the second door opens after the first door opens is set using Function 5 on the programming schedule, with up to a 5 second delay being achievable.

14.1.3 Jamb-Mounted Switches

These switch types can be used but are not practical for individuals using a wheelchair because of their range of motion (positioning their wheelchair to clear the door opening). In a vestibule entrance, a switch must be installed in the vestibule space to prevent entrapment and so the doors can be sequenced to ease the traffic flow and limit the time of both doors being open to outside weather conditions.

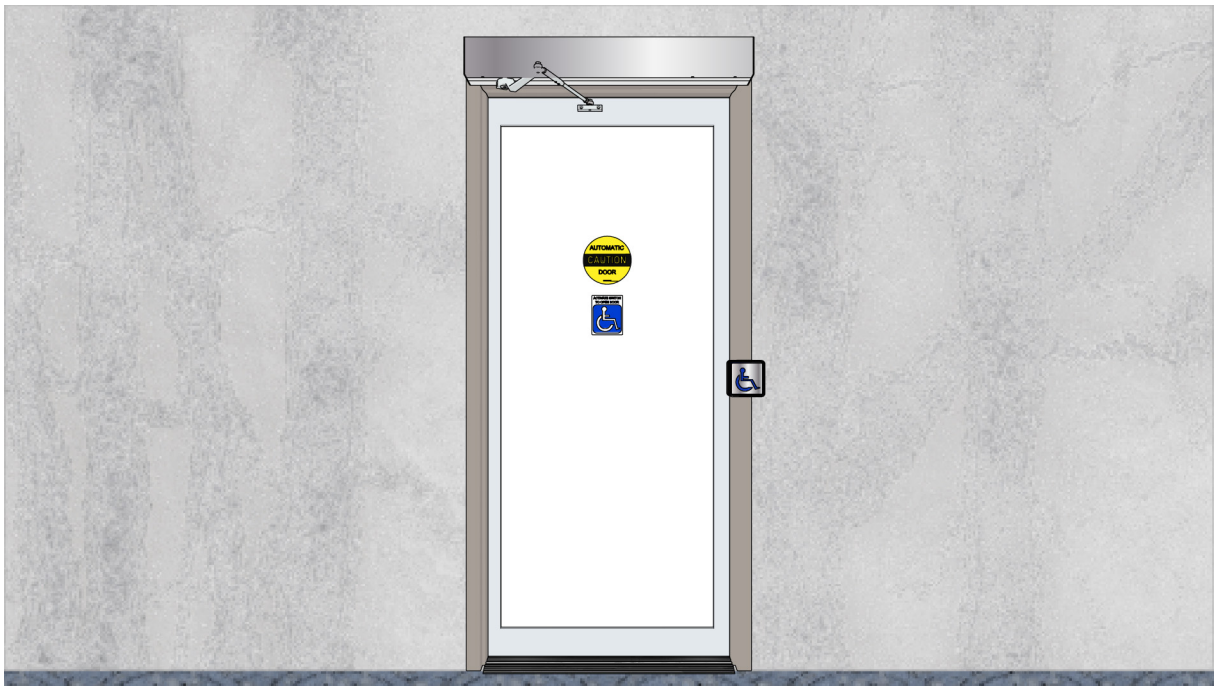

14.1.4 Push Plate or Knowing Act Devices

- Test the knowing act device. The door should swing smoothly to the open position and stop without impact. After a time delay (normally 1s to 5s) the door should close smoothly.
- Repeat on the other side of the opening if the door has two-way operation.
- If there is more than one push plate or Knowing Act Device on each side of the door, each should be tested.

14.1.5 Electric Strike

The HA8 Operator control unit is capable of supplying power (24VDC, 6W or 250 mA) to the electric strike. The power is supplied from the board on an ADA unit. When the door is triggered, a contact closure occurs across Ground and N.O. or N.C. to energize the strike. The contact closure is applied for 200 ms. before the door activates and continues for 2 seconds after the door begins to open. The electric strike operation is achieved by connecting 24 VDC to strike in (terminal 4 to terminal 5 of the terminal block) and connecting the strike power wires to strike out (terminal 6) and ground (terminal 3).The strike has a delay function from 0.125 seconds - 2 seconds.

Analog board connection – strike out +ground, jumper between strike in + 24VDC

Digital Board connection – N.O. + GND

NOTICE

Fully automatic boards do not support electric strike.

14.2 Header Cover Installation

After all adjustments have been completed, the face cover must be installed to the header box. There are 4 counter-sunk screw locations on the underside of the face cover.

1. Mate the cover channel (2) to the header rail (1).

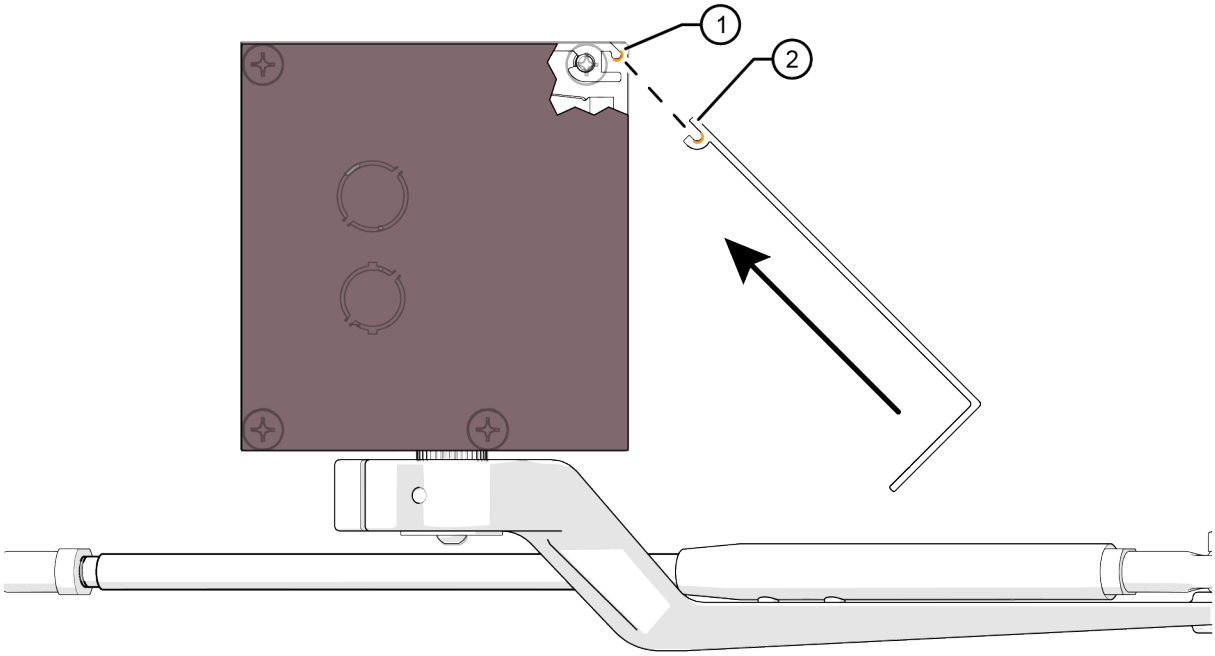

2. Rotate the header cover to close.

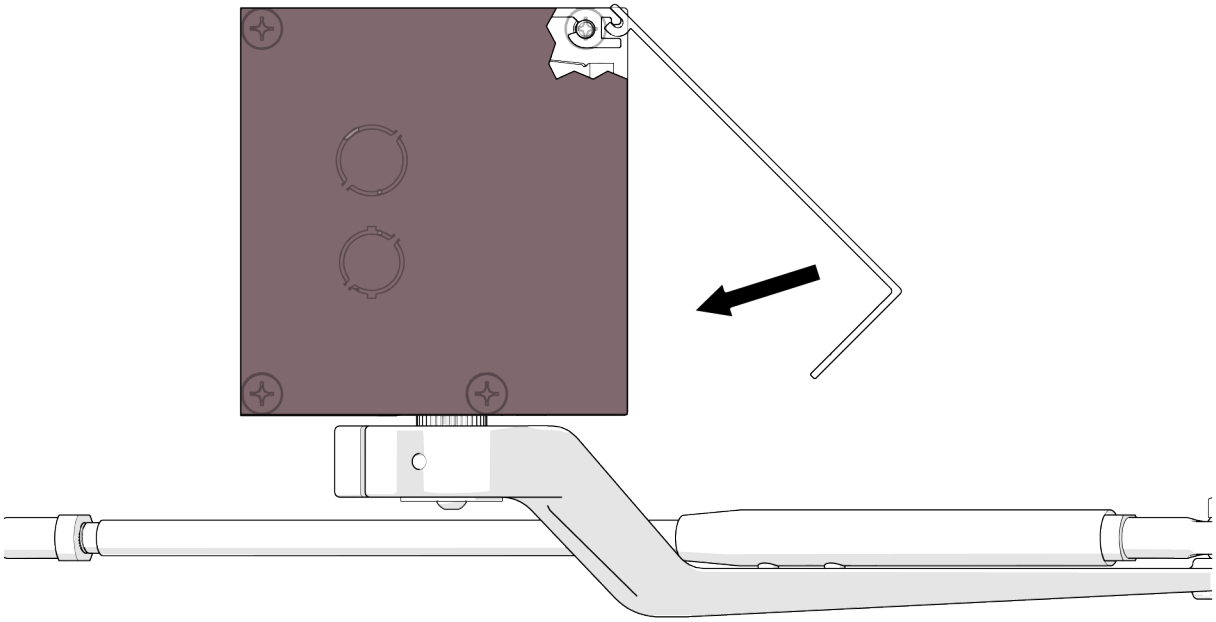

3. Install the four (4) screws to secure the header cover to the header.

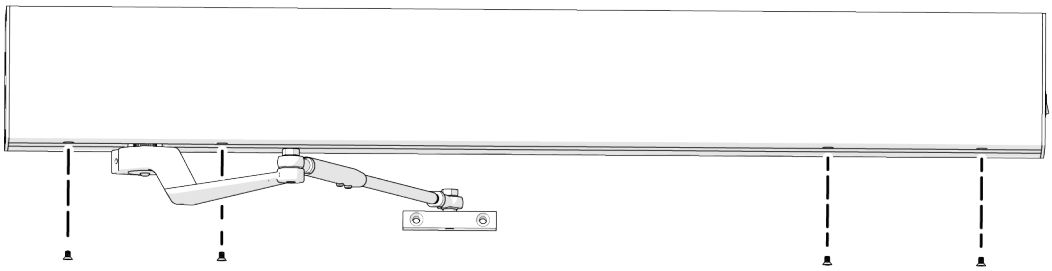

14.3 Safety Decals

CAUTION

Before leaving the job site:

- Clean up the work area
- Make sure all fasteners have been tightened properly
- Clean the glass
- Install safety decals

Install all safety, traffic control, and instruction decals to the door as required. This is very important. Failure to do this leaves the installer LIABLE for any accident that might occur. This must be done!

A summary of the ANSI standard A156.19 requirements for safety decals is as follows:

Each decal shall be mounted on the door at a height of 50 ± 12” (1270 ± 305 mm) from the floor to the center line of the sign. The sign chosen will depend on the classification of the door operator.

Clean the area well before applying the decal. Remove the upper portion of the backing and roll the decal onto the door in a slow motion. Check to confirm the decal is straight. Use a flat edged soft spreader to smooth out the decal. Remove the lower backing from the decal and smooth out any air pockets.

After all adjustments have been finished, the face cover must be installed to the header.

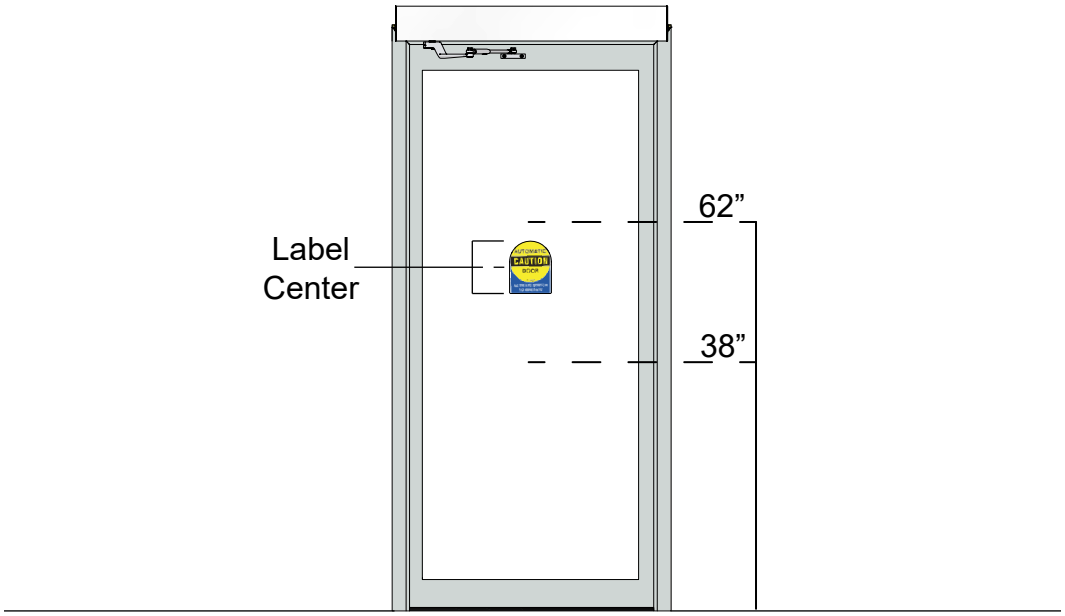

The Record Group (part of the ASSA ABLOY Group) is an industry-leading manufacturer of automatic door systems. Founded in Switzerland - Record has historically relied on combining its global presence with local reach to achieve customer satisfaction and success; pushing the boundaries of product innovation from the start, Record's product range today includes top-quality revolving doors, sliding doors, swing doors, hermetic doors and security entrance solutions. Together with its well-known maintenance service, which supports and inspires clients around the world, Record is proud to offer end-to-end entryway solutions to suit any business' individual needs.

www.record.group

Part of Assa Abloy