1. Determine the Door Hand (push instructions)

Installation video

https://s3m.io/xkcMQ

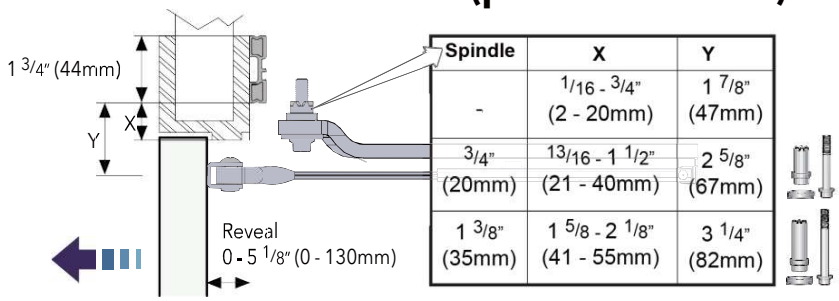

Spindle	X	Y
-	1/16 - 3/4" (2 - 20mm)	1 7/8" (47mm)
3/4" (20mm)	13/16 - 1 1/2" (21 - 40mm)	2 5/8" (67mm)
1 3/8" (35mm)	1 5/8 - 2 1/8" (41 - 55mm)	3 1/4" (82mm)

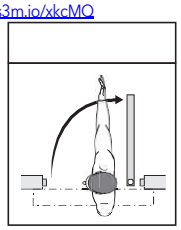

2. Mount the Backplate

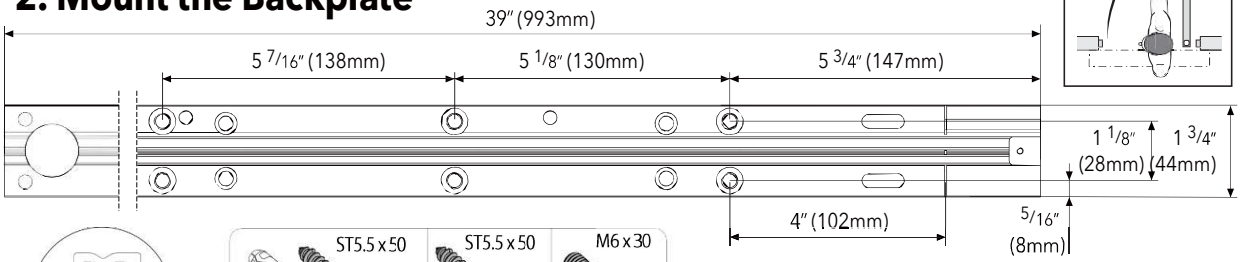

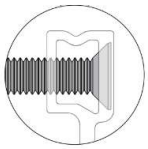

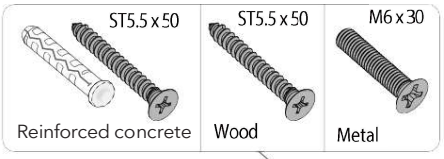

Note! Screw head must be flush with the back plate surface

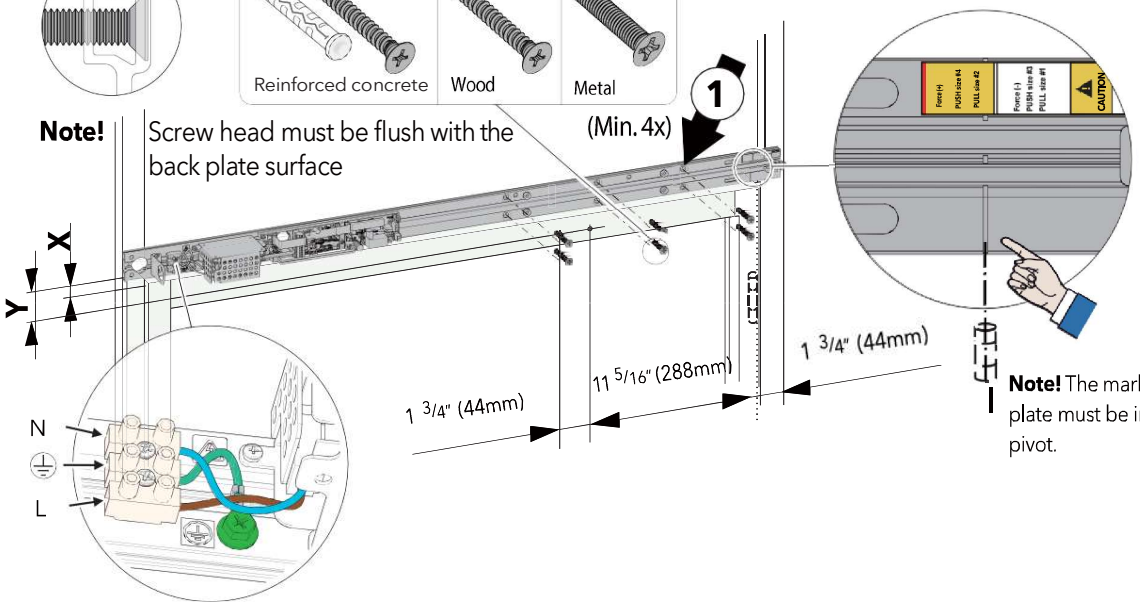

Note! The mark on the back plate must be in line with CL pivot.

3. Mount the Lock kick (Optional)

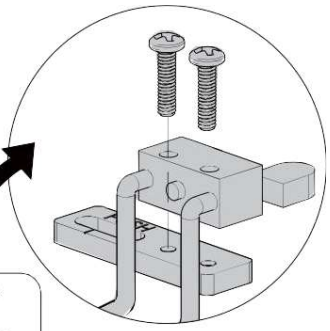

Note! Install lock kick for all fire-rated doors.

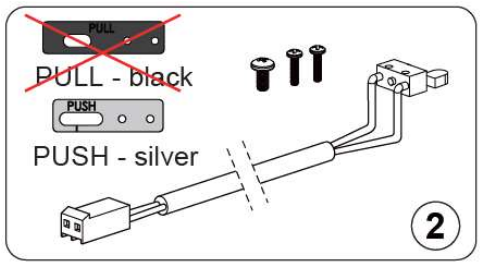

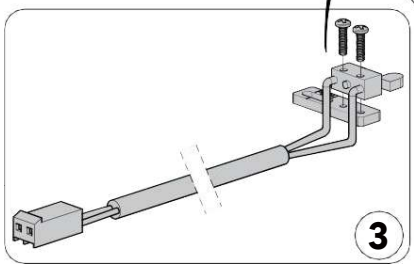

© ASSA ABLOY 2025
Technical data is subject to change without notice.

Quick Start

Record HA7

1021444

record

5.0

1020878-en-US

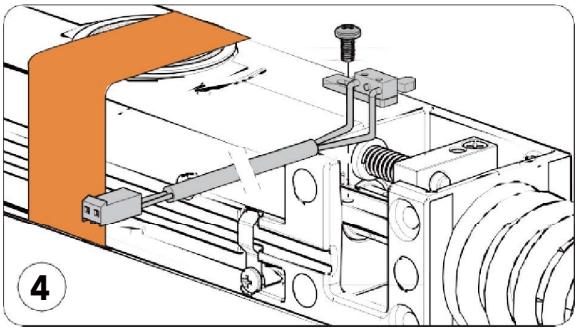

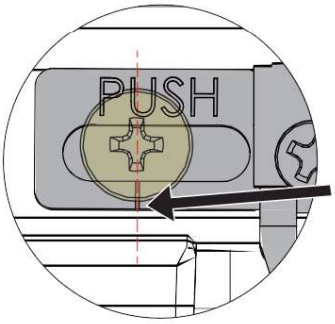

Refer to the picture for the recommended location of the lock kick.

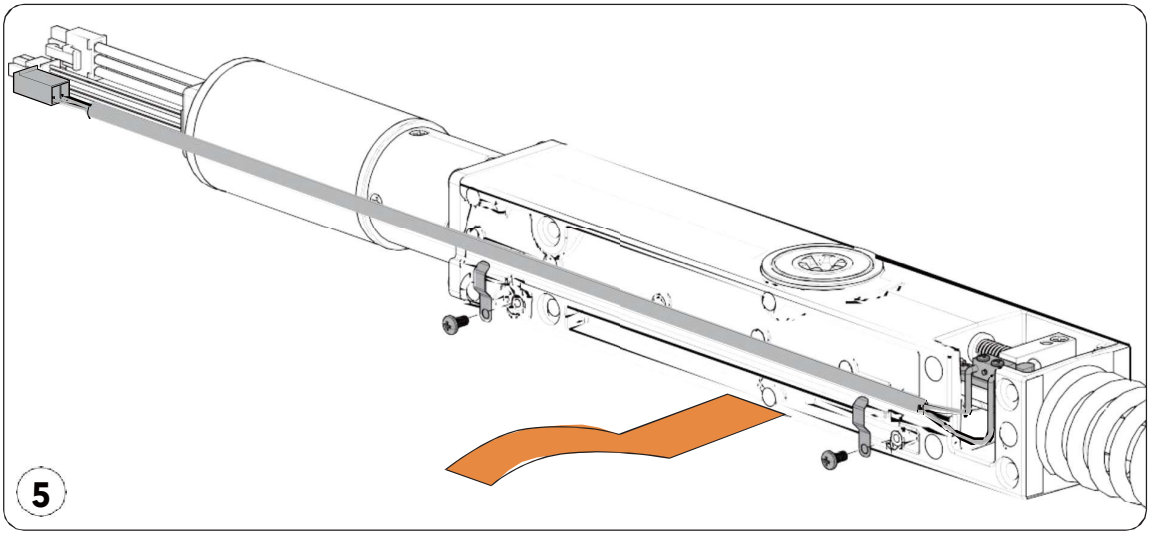

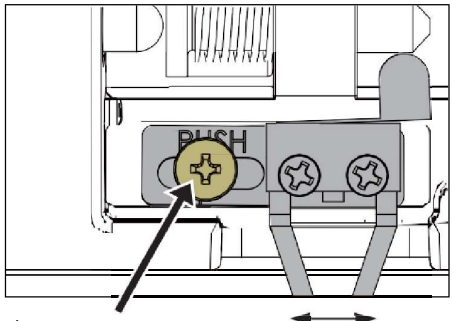

Unscrew this screw to move the lock kick and adjust angle of lock kick.

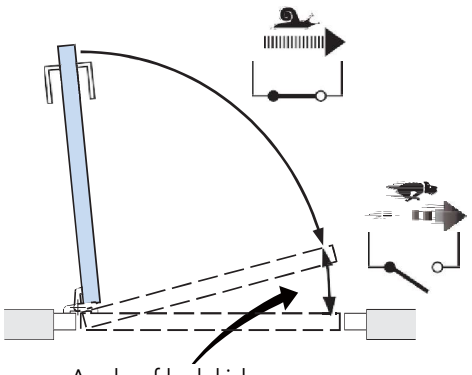

Angle of lock kick

4. Mount the Operator

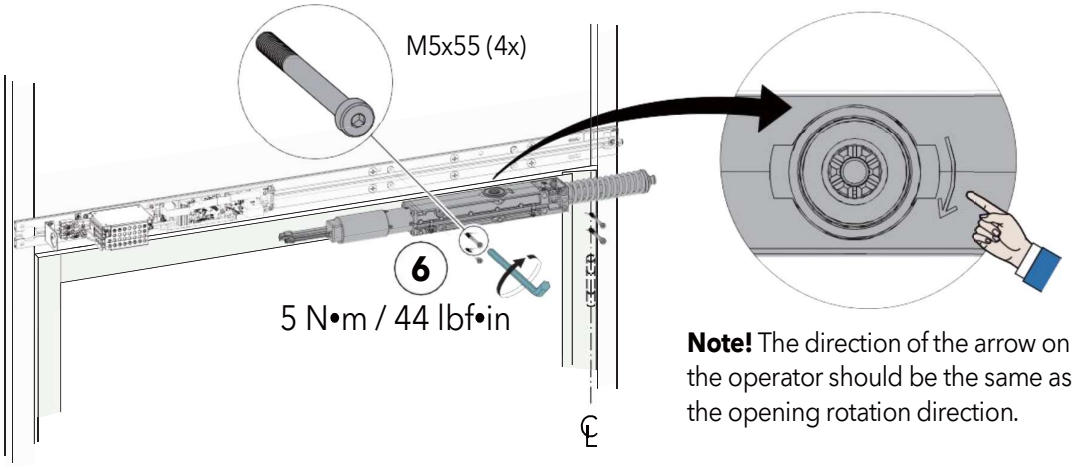

Note! The direction of the arrow on the operator should be the same as the opening rotation direction.

5. Mount the Arm

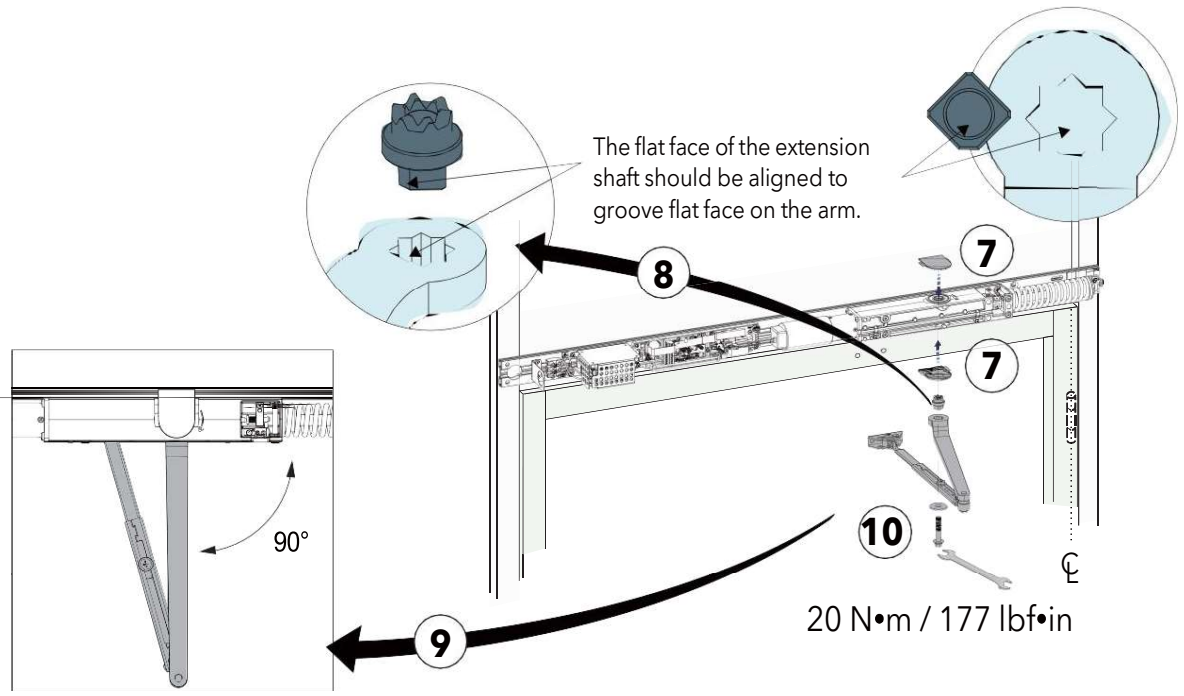

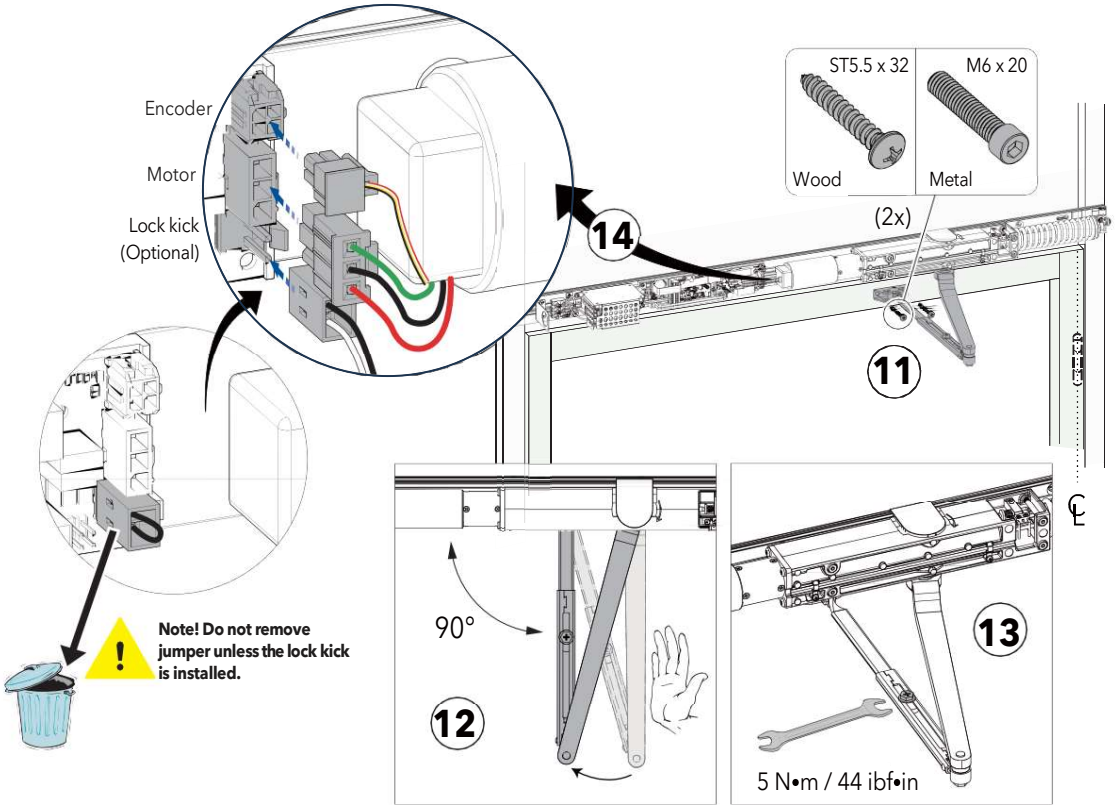

1. Determine the Door Hand (pull instructions)

Installation video

https://s3m.io/B5Cdo

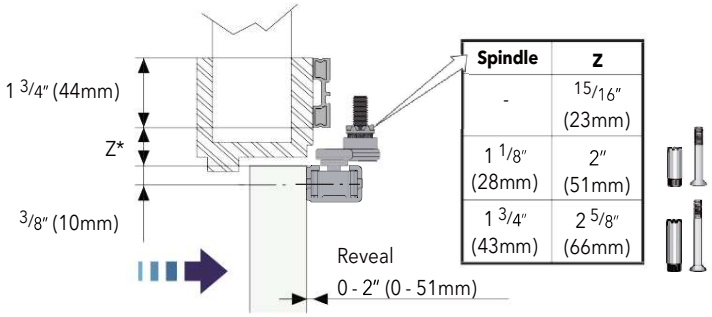

Spindle	Z
-	15/16" (23mm)
1 1/8" (28mm)	2" (51mm)
1 3/4" (43mm)	2 5/8" (66mm)

***Note!** The arm sliding track must be mounted at the top of the door, and the back plate at the Z-measurement from top of the door.

Left hand

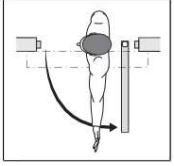

2. Mount the Backplate

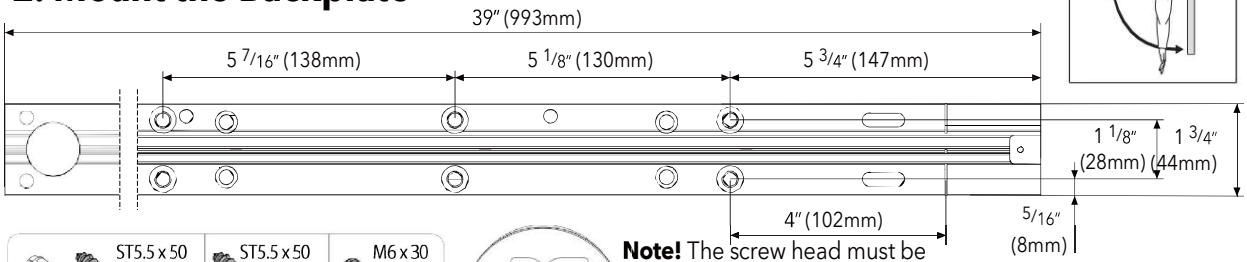

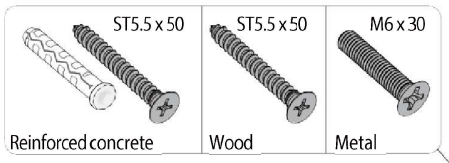

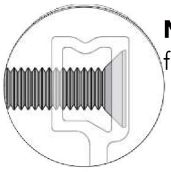

Note! The screw head must be flush with the back plate surface.

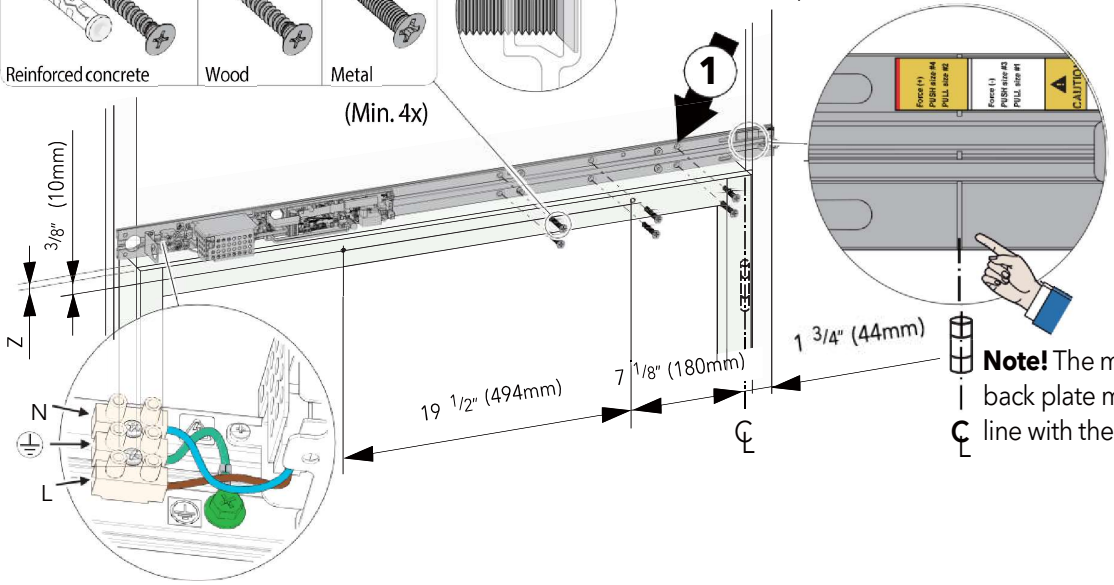

Note! The mark on the back plate must be in line with the CL pivot.

3. Mount the Lock kick (Optional)

Note! Install a lock kick for all fire-rated doors.

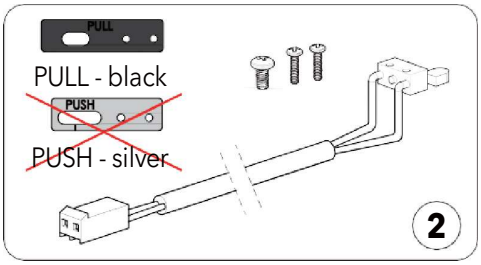

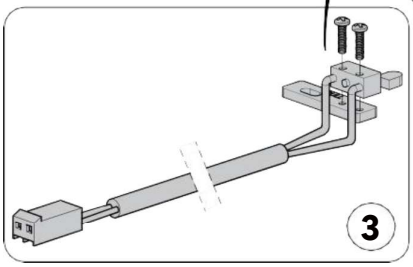

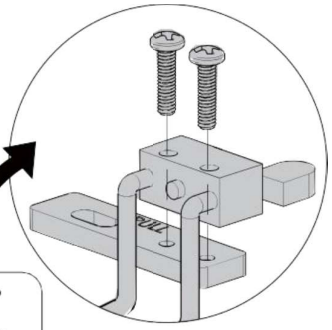

1020878-en-US

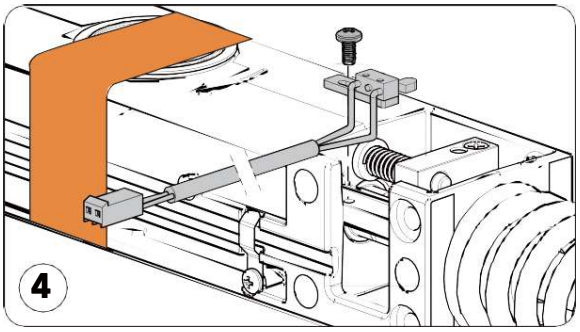

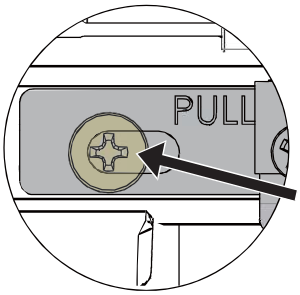

Refer to this picture for the recommended location of the lock kick.

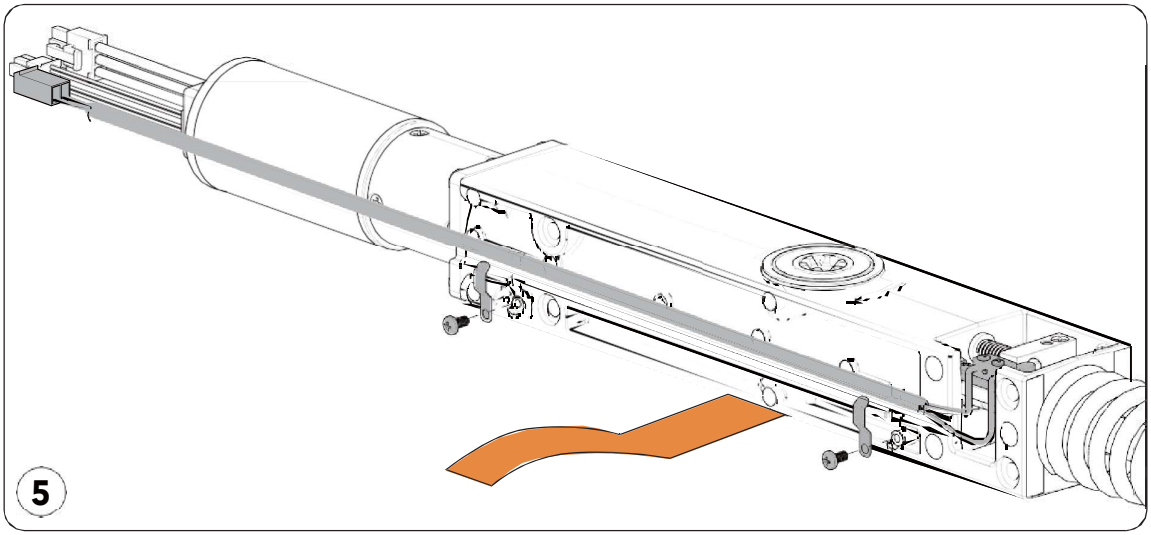

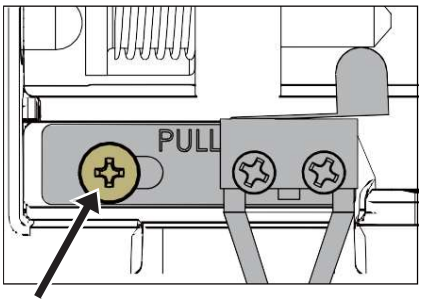

Unscrew this screw to move the lock kick and to adjust the angle of the lock kick.

\+ Max. – Min.

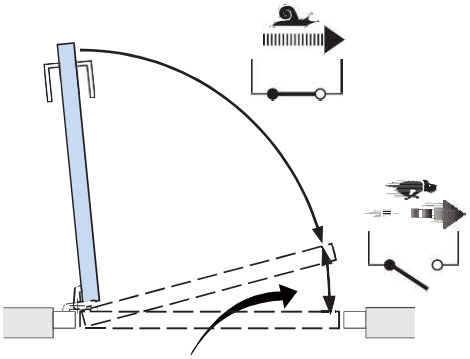

Angle of lock kick +/-

4. Mount the Operator

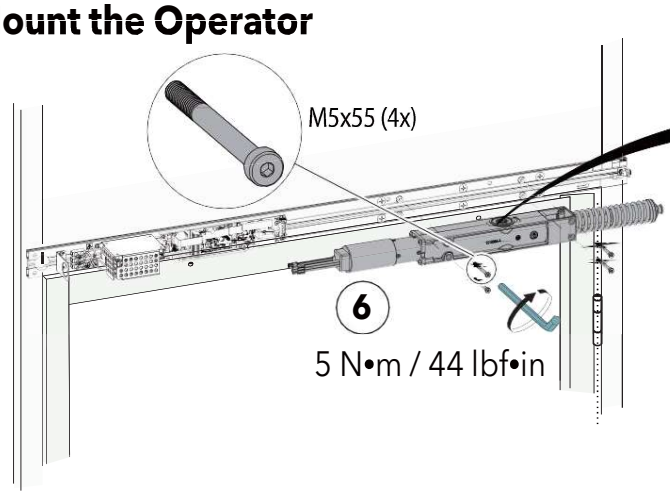

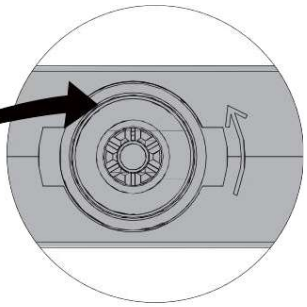

Note! The direction of the arrow on the operator should be same as the opening rotation direction.

5. Mount the Arm

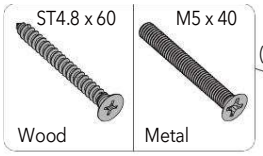

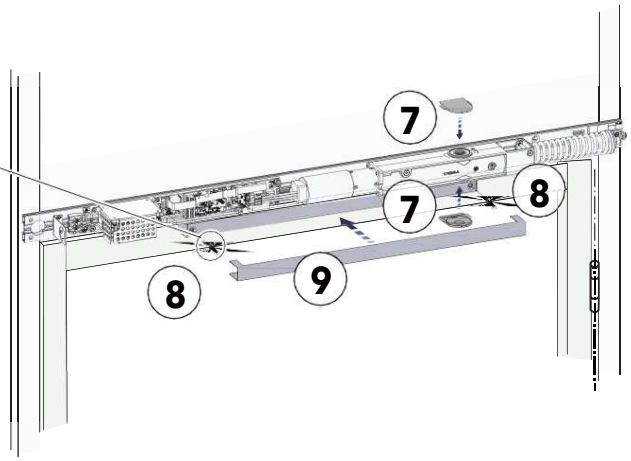

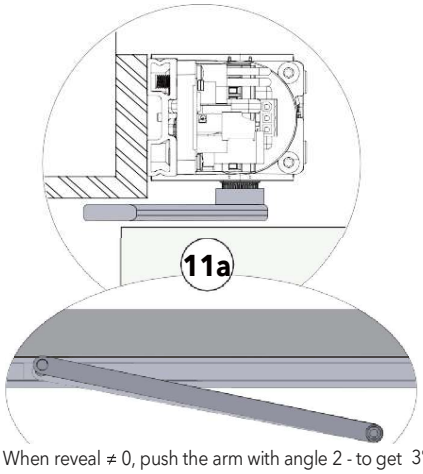

When reveal ≠ 0, push the arm with angle 2 - to get 3° pre-tension, but don't exceed. Please check spring pre-tension and lock kick.

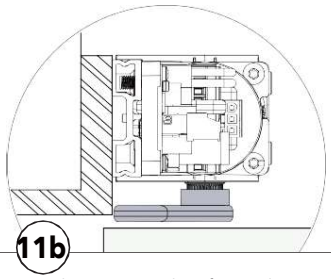

When reveal = 0 and arm against door frame, do following steps to get pre-tension.

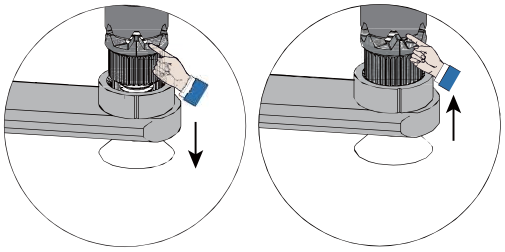

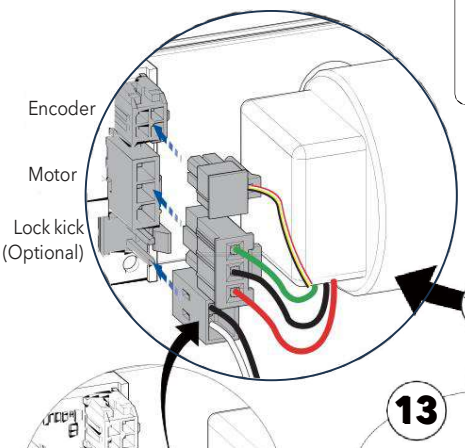

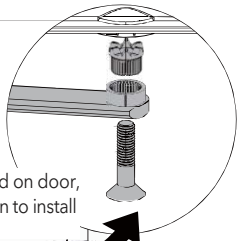

Note! When track is mounted on door, put the door in open position to install the arm.

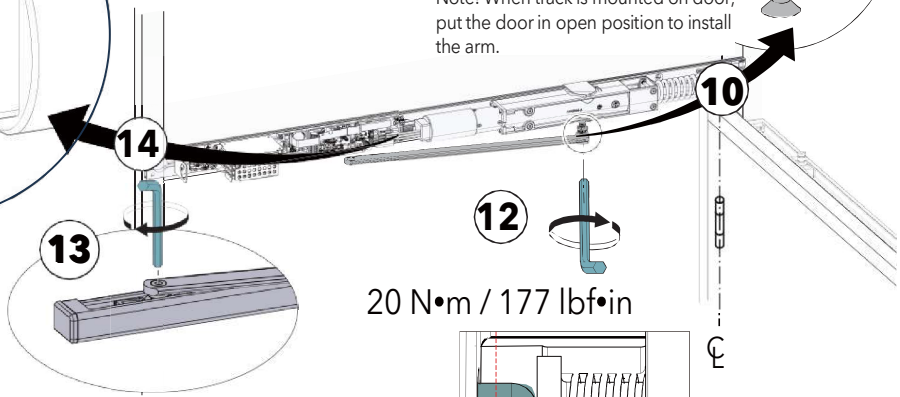

20 N•m / 177 lbf•in

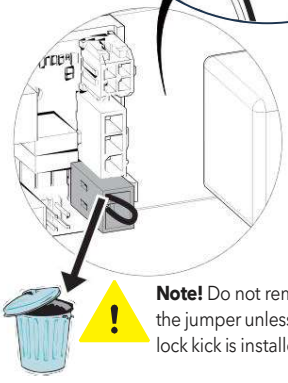

Note! Do not remove the jumper unless the lock kick is installed.

Note! If the pre-tension exceeds what is shown, it will cause this pin to be below the line and the lock kick will not work.

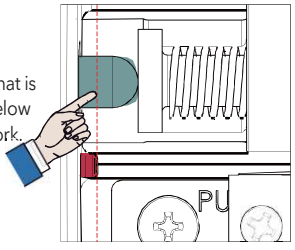

6. Spring Pre-tension

Door closer power size according to ANSI 156.4	Closing force between 1/2" (13mm) and 3" (76mm)		Door weight
	F (lbf)	F (N)	
Size #1 PULL	2 - 3	9 - 13	50 lbs. / 23 kg
Size #2 PULL (Default)	3 - 5	13 - 22	80 lbs. / 36 kg
Size #3 PUSH	5 - 8	22 - 36	100 lbs. / 45 kg
Size #4 PUSH (Default)	8 - 11	36 - 49	125 lbs. / 57 kg

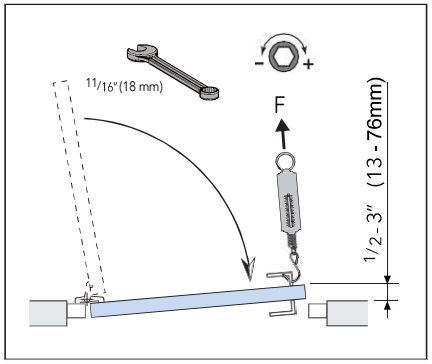

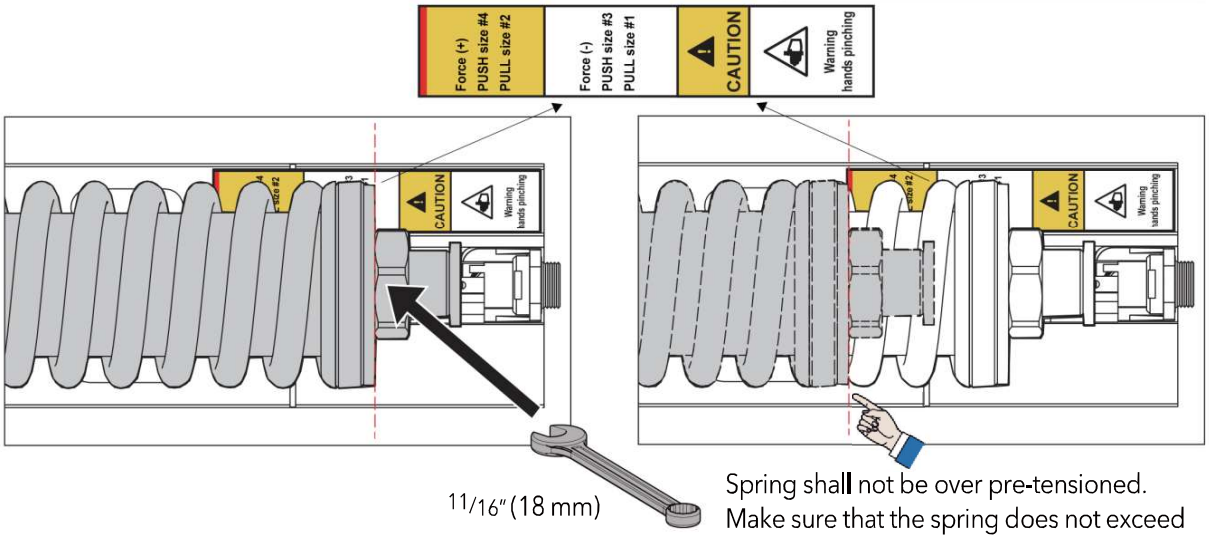

Spring shall not be over pre-tensioned. Make sure that the spring does not exceed the red line on the sticker.

7. App Install / Set-up

Note! An external doorstop is to be installed to prevent the door from over travel.

1 Install the app

Download the **Record Swing Door Manager** app from the **Google Play** or the **App Store**.

Google Play

Download on the App Store

2 Log in to the app with owner

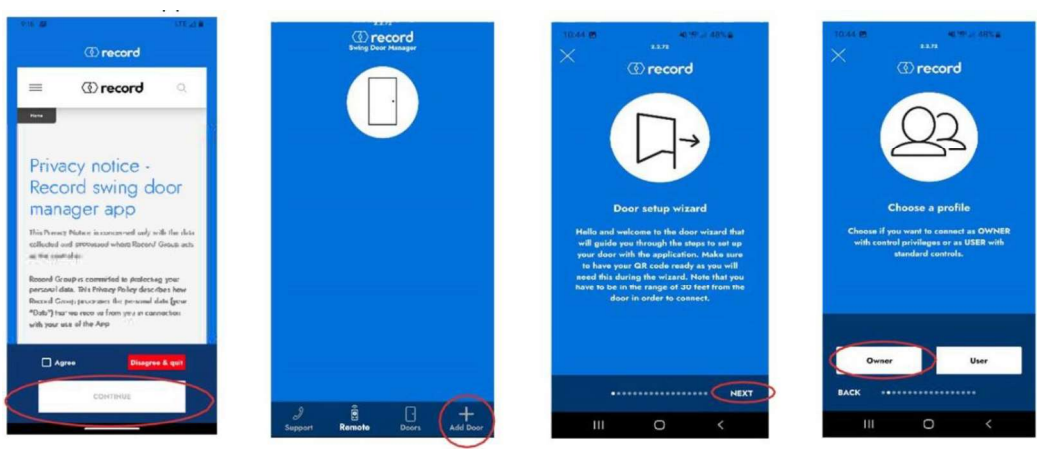

3 Learn

Press Learn button on CU for more than 4 seconds.

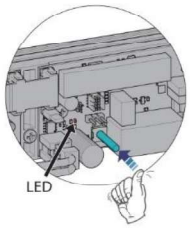

Scan QR code on the label that attached to the flat cable of CU.

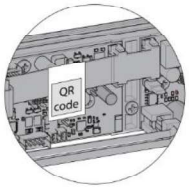

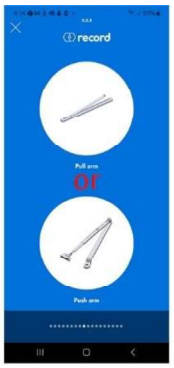

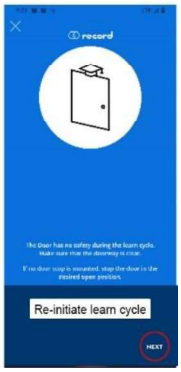

4 Test

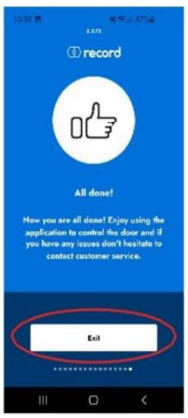

5 Settings

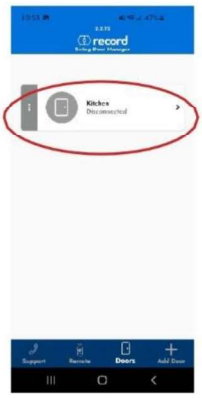

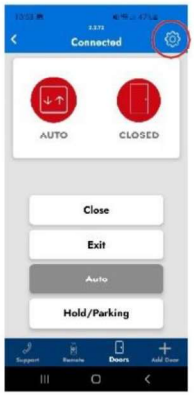

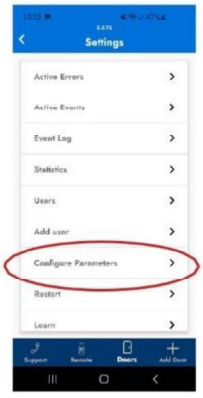

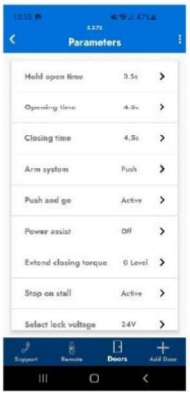

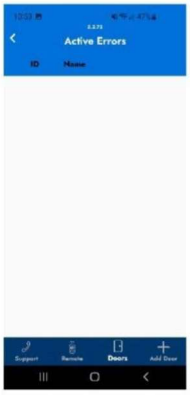

6 Add user by owner

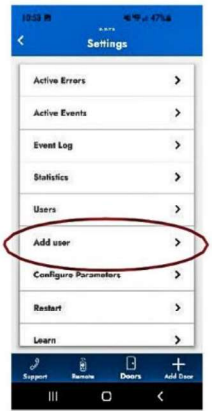

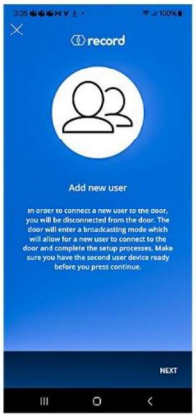

7 Remove user by owner

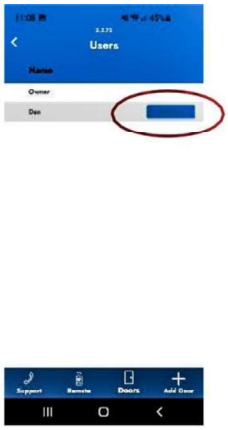

8 Log in as a user

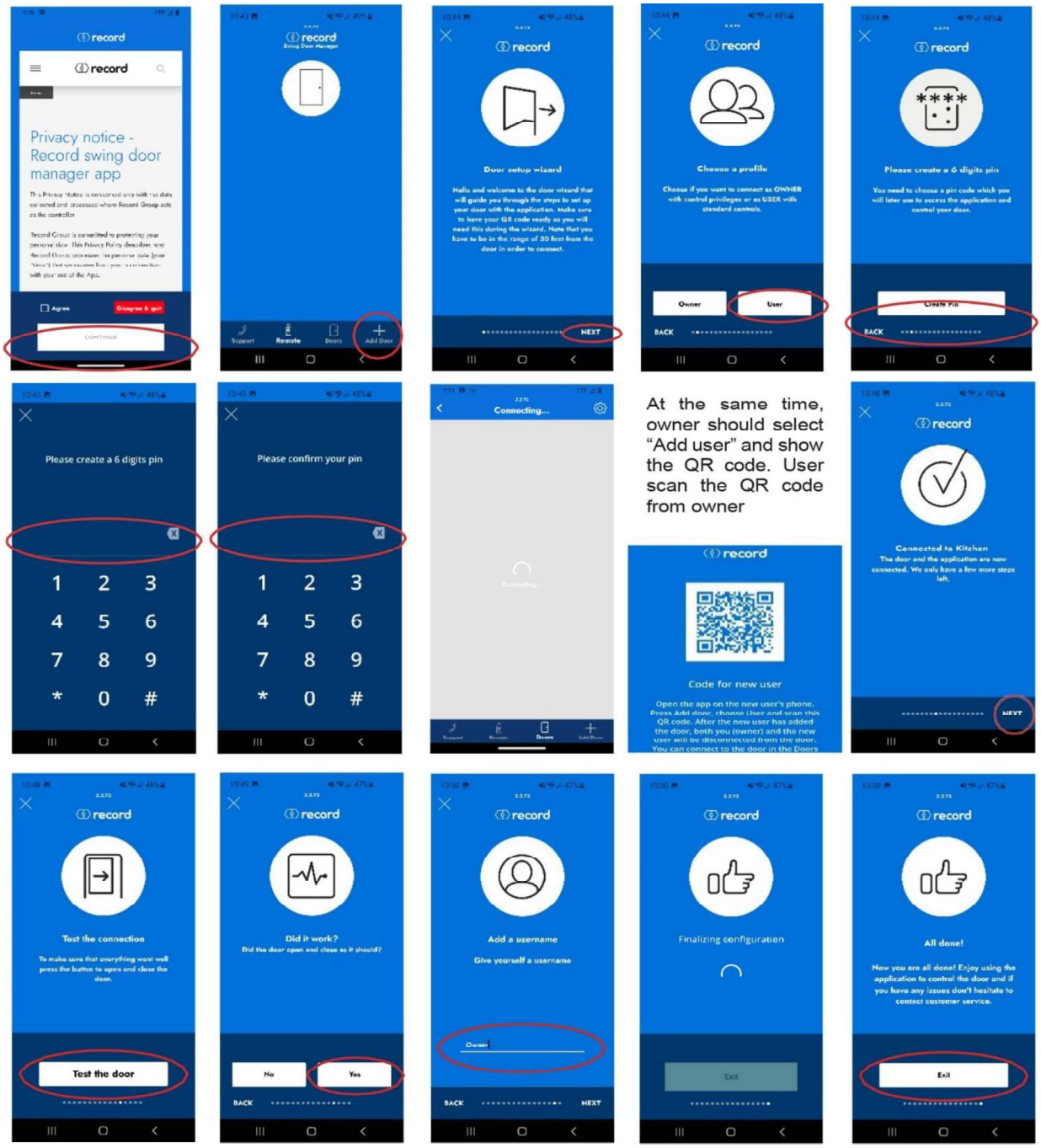

9 Additional door information

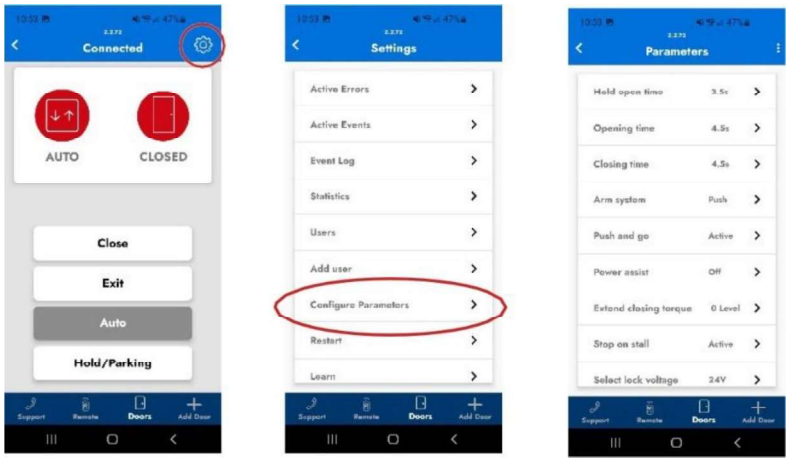

8. Configuration Parameters

Parameter name	Default settings	Value
Hold open time	5s	2s - 6h
Opening time	4.5s	4.5s - 9s
Closing time	4.5s	4.5s - 9s
Arm system	Push/Pull	Push/Pull
Push and go	Not active	Not active/Active
Power assist	Off	Off/Low/Medium/High
Extend closing torque	0 Level (Lowest)	0 Level (Lowest) - 10 Level (Highest)
Stop on stall	Active	Not active/Active
Select lock voltage	12V/24V	12V/24V
Select lock power	Lock with power/Lock without power	Lock with power/Lock without power
Push and close	Not active	Not active/Active
Key impulse hold open time	5s	2s - 25s
Number of lock retries	1 time	0 - 2 times
Lock kick	Not active	Not active/Active
Reverse upon obstruction	Active	Not active/Active
Lock release time	0.5s	0s - 5s
Ratchet function	Not active	Not active/Active
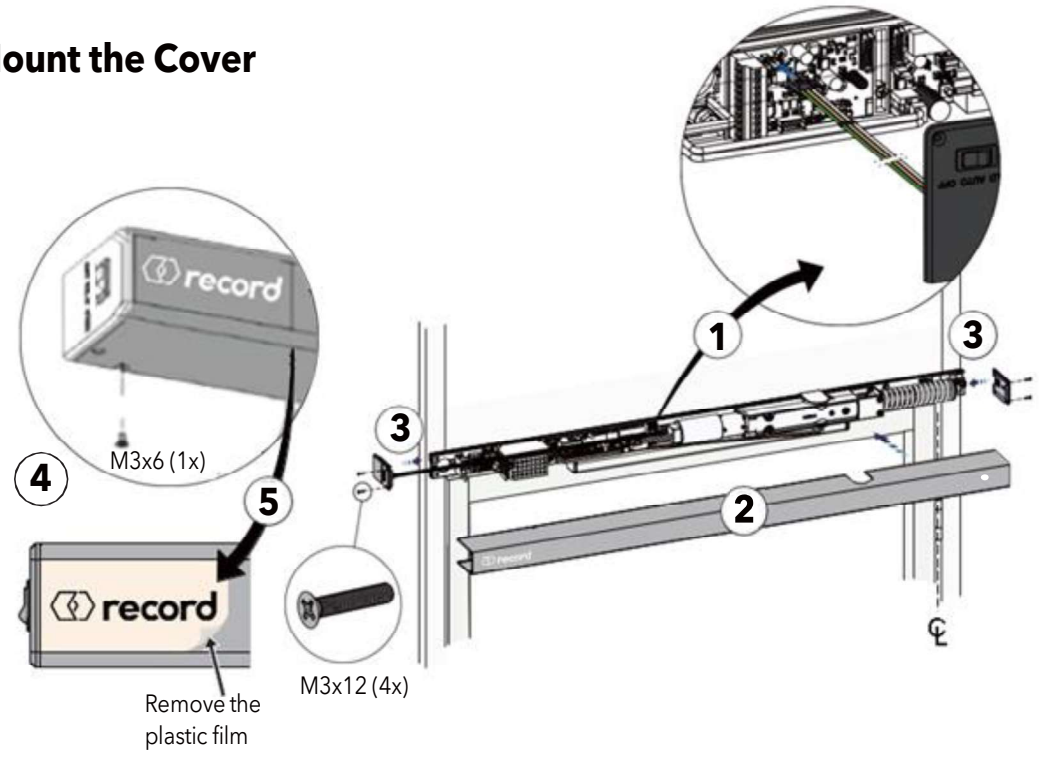
9. Mount the Cover