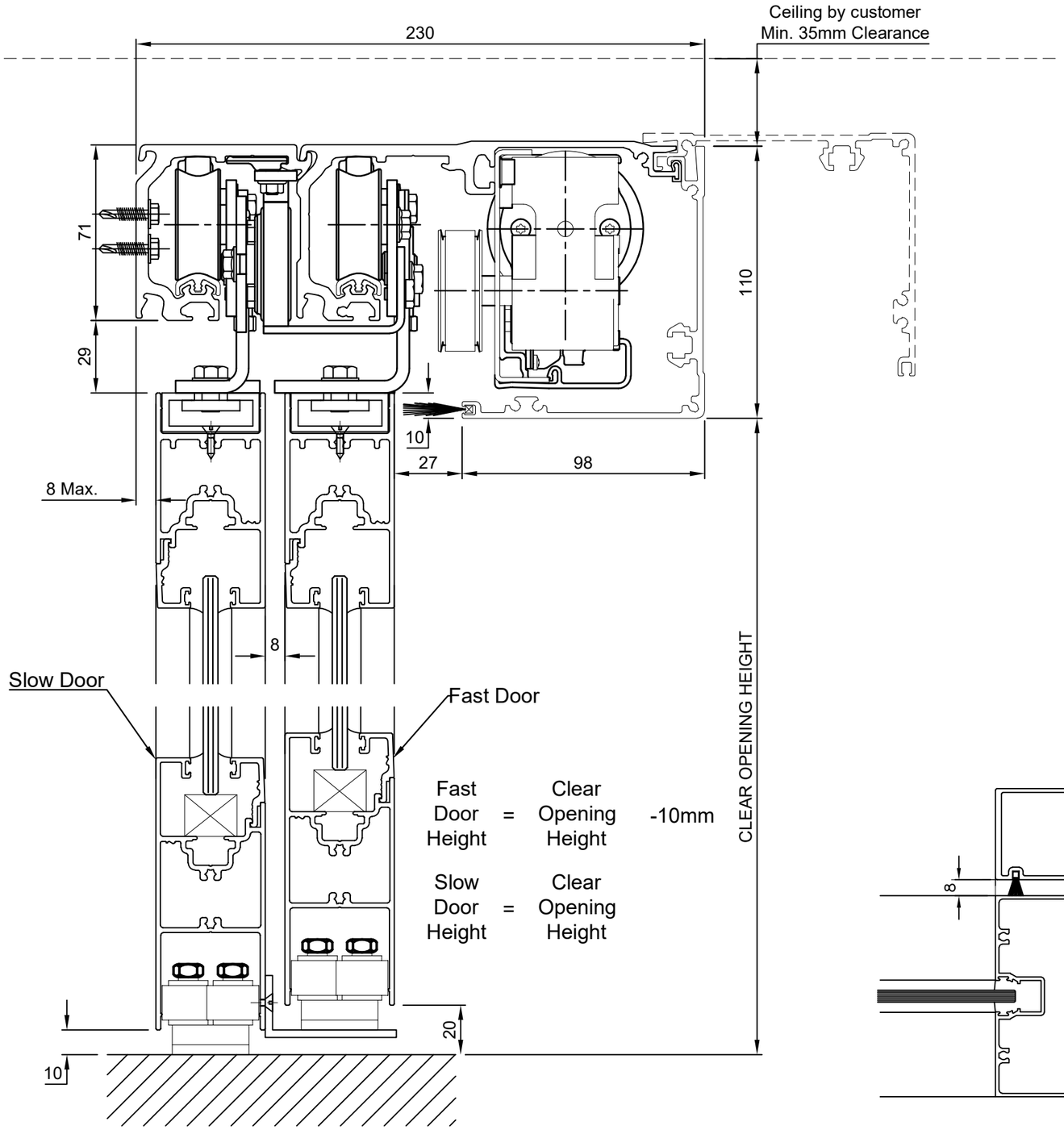

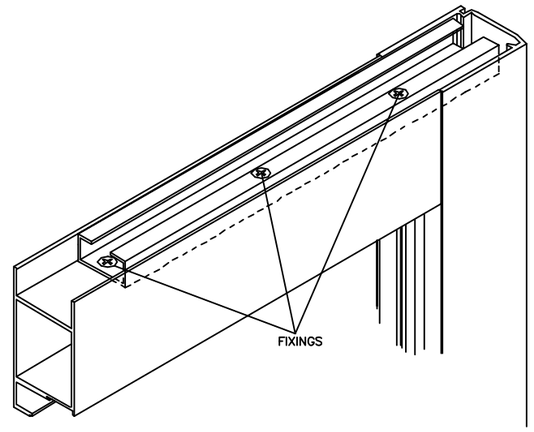

HANGER CHANNEL FIXING

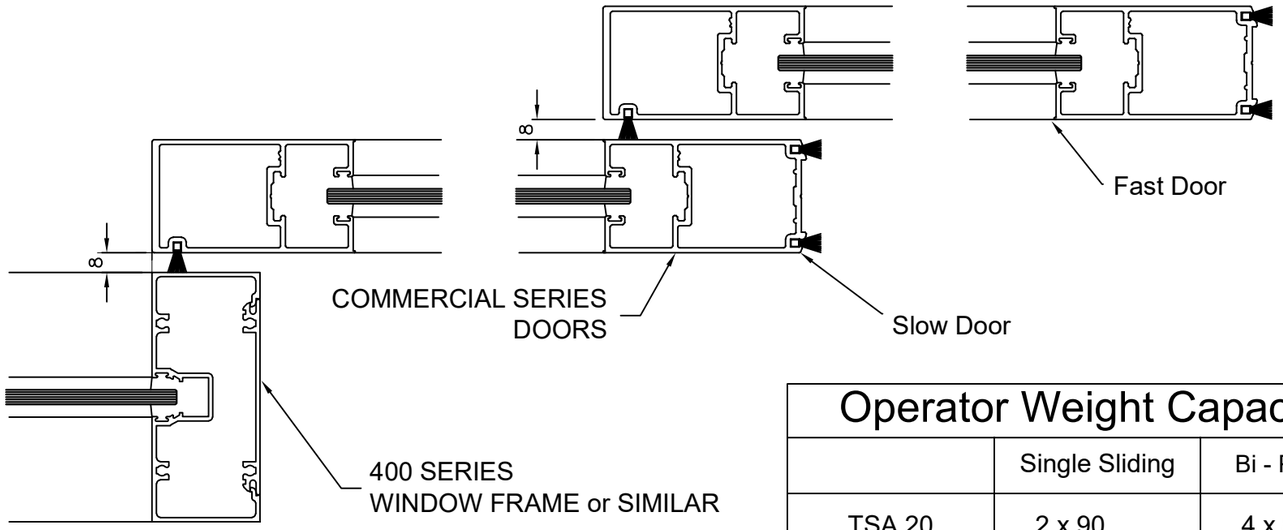

Operator Weight Capacity

	Single Sliding	Bi - Parting
TSA 20	2 x 90	4 x 80
TSA 22	2 x 170	4 x 130
TSA 20 DUO	2 x 120	4 x 90

record automatic doors pty ltd
ABN: 58 601 122 874

Melbourne
117 SCANLON DRIVE
EPPING, VICTORIA 3076
T: + 61 3 8339 2888 / 1300 804 438
E: infomelbourne@recorddoors.com.au

Sydney
30 PRINCE WILLIAM DRIVE
SEVEN HILLS, NSW 2147
T: + 61 2 8811 4000
E: infosydney@recorddoors.com.au

MODEL: TSA20-110-FRD

110mm Pelmet Aluminium Framed Glass Door

PROJECT:

Drawn: PPG

Date: 24th February, 2020

Scale: 1 : 2

Dwg no: TSA20-110-FRD