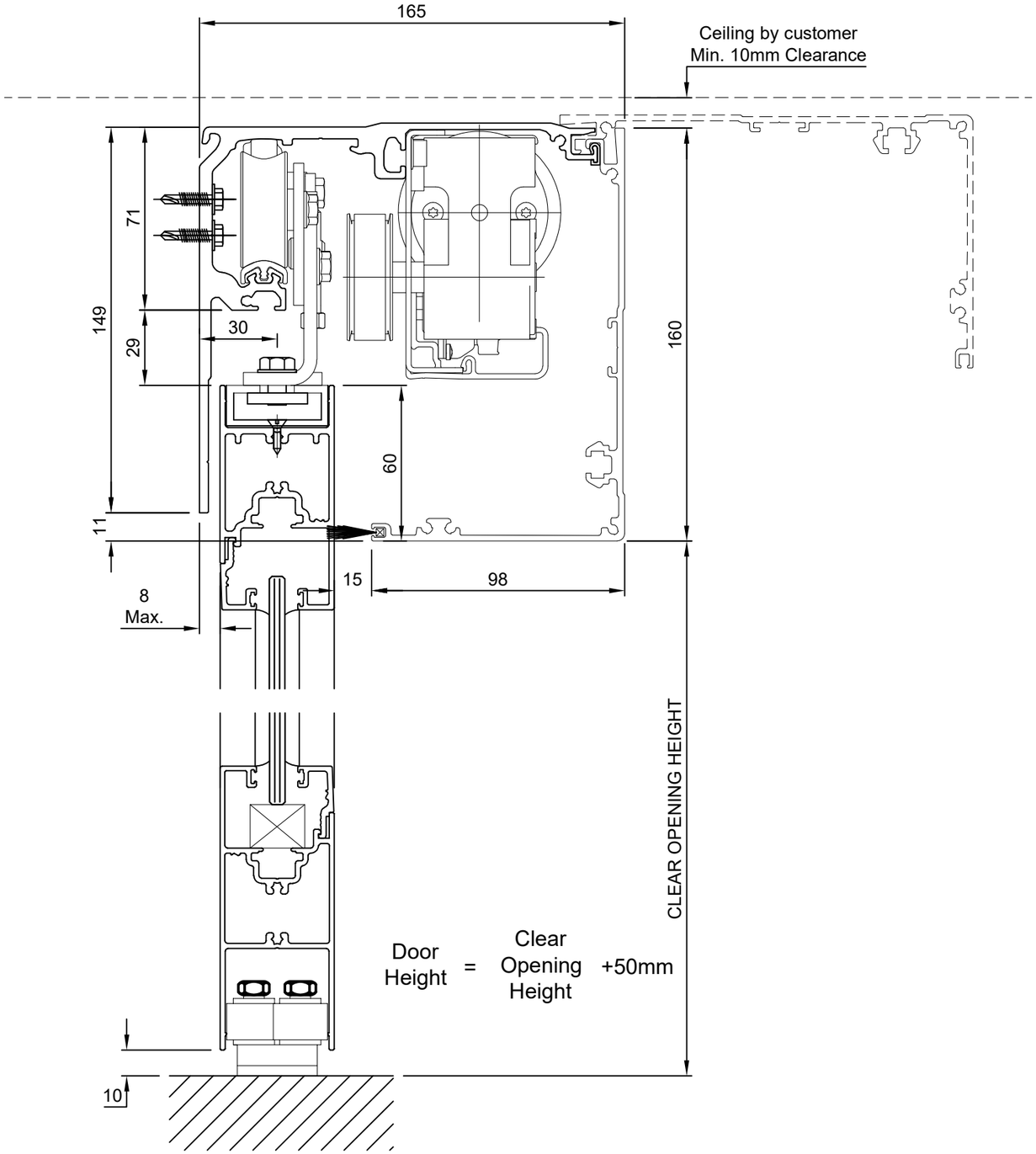

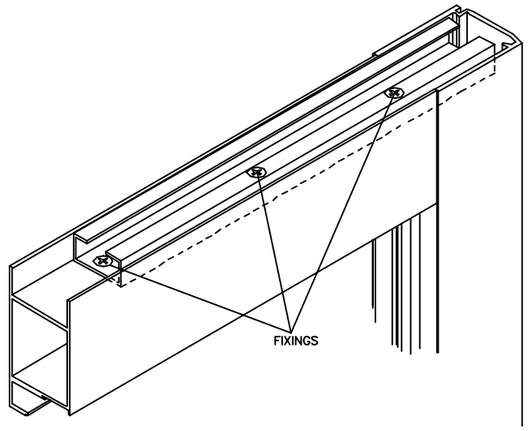

HANGER CHANNEL FIXING

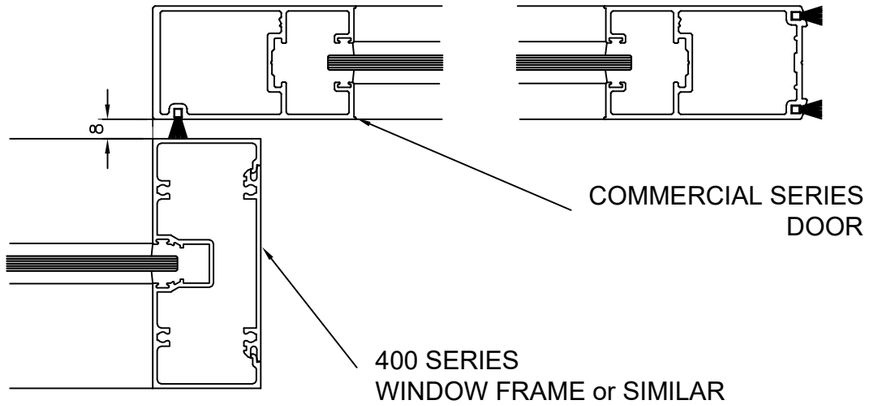

Operator Weight Capacity

	Single Sliding	Bi-Parting
STA 21 STA 20 STA 20 DUO	1 x 140 1 x 175 1 x 200	2 x 100 2 x 150 2 x 175

record automatic doors pty ltd
ABN: 58 601 122 874

Melbourne
117 SCANLON DRIVE
EPPING, VICTORIA 3076
T: + 61 3 8339 2888 / 1300 804 438
E: infomelbourne@recorddoors.com.au

Sydney
30 PRINCE WILLIAM DRIVE
SEVEN HILLS, NSW 2147
T: + 61 2 8811 4000
E: infosydney@recorddoors.com.au

MODEL: STA20-160-FRD / STA21-160-FRD	Drawn: PPG
160mm Pelmet Aluminium Framed Glass Door	Date: 24th February, 2020
PROJECT:	Scale: 1 : 2
	Dwg no: STA21-160-FRD